Load Pin - 1.25 Inch, 30K

Alloy Steel, Environmentally Sealed

Specifications

Seal Type:
Environmentally sealed

Connector Type:
Turck, M12 4-pin male

Warranty:
One-year limited warranty

Order Information

Picture is a representation of actual product

Load Rating	Part#	Est. Weight	Price
Static 30,000 lbs	**190168**	10 lbs	$1,350.00

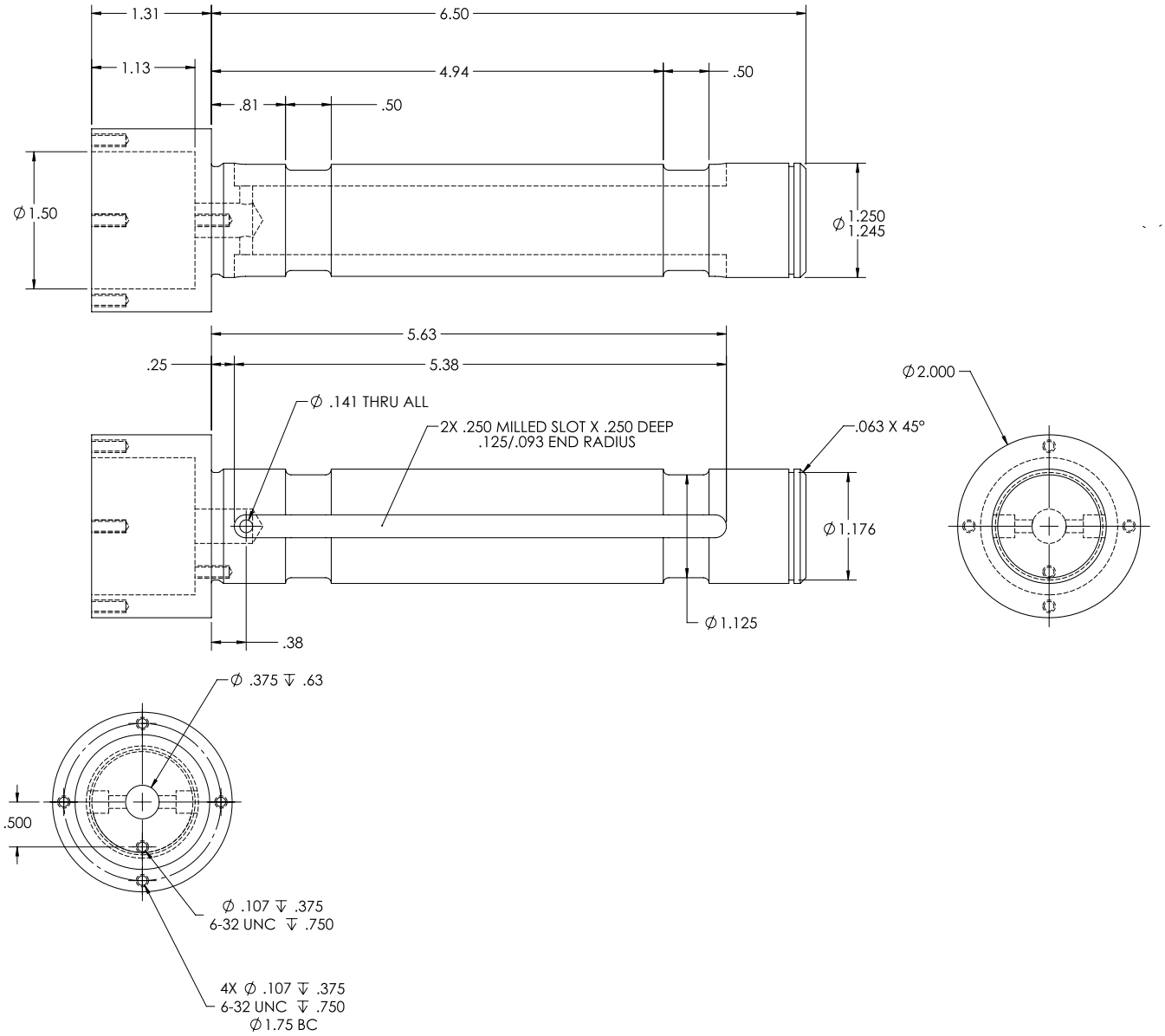

An ISO 9001 Registered Company © 2019 Rice Lake Weighing Systems 01/19 Prices and specifications subject to change without notice. Visit ricelake.com for current prices.