Ishida WM-Micro

Tabletop Wrapper
1st Edition

User's Manual

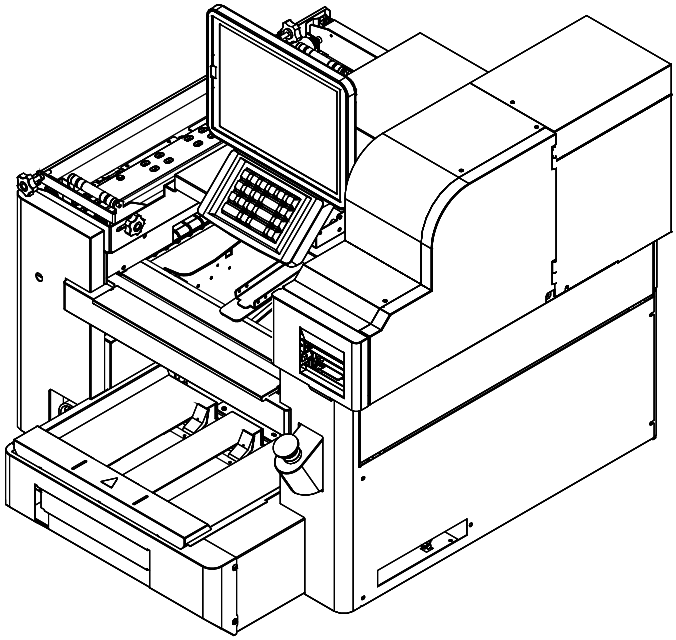

December 20, 2024

RICE LAKE RETAIL SOLUTIONS | ISHIDA

PN 227554 Rev A

© Rice Lake Weighing Systems. All rights reserved.

Rice Lake Weighing Systems® is a registered trademark of
Rice Lake Weighing Systems.
All other brand or product names within this publication are trademarks or
registered trademarks of their respective companies.

All information contained within this publication is, to the best of our knowledge, complete and accurate at the time of publication. Rice Lake Weighing Systems reserves the right to make changes to the technology, features, specifications and design of the equipment without notice.

The most current version of this publication, software, firmware and all other product updates can be found on our website:

www.ricelake.com

IMPORTANT NOTICE

Thank you for purchasing the ISHIDA WM-MICRO.
This manual describes the procedures for installing, operating, and maintaining the machine.

Those who handle the machine must be aware of the hazards involved. These dangers may not be obvious, so it is imperative to follow the instructions detailed in this manual when installing, operating, and maintaining the machine.
Therefore, we recommend that you thoroughly read and understand this manual before installing, operating, or maintaining the machine, and keep this manual in a safe place for reference whenever necessary.

Safety countermeasures should be carefully considered and implemented before performing any installation, operation, or maintenance procedure not specifically described in this manual or indicated on the machine itself.

ISHIDA Corporation warrants that this product conforms to the specifications. If the product does not conform to the specifications, it will be repaired or replaced free of charge within the warranty period.

Provided, however, that ISHIDA Co., Ltd. shall not be liable to Purchaser for lost profits, special damage (whether or not foreseeable), consequential damage, indirect damage, or any claims for consequential compensation whatsoever (howsoever caused).

ISHIDA shall not be held responsible for any warranty, repair, or other claim relating to the unit if it is improperly handled, stored, installed, or maintained, or if it is contaminated, abused, misused, or altered in any way.

This document and other materials contain important confidential information of ISHIDA Co., Ltd. Unauthorized reproduction, modification, transfer, transmission to the public, or other inappropriate use or disclosure to third parties without prior permission is strictly prohibited.

Copyrights to all contents of this document and other materials belong to ISHIDA Co., Ltd. Reproduction, modification, transfer or transmission to the public without prior permission is prohibited by copyright law.

ISHIDA Co., Ltd. grants permission for employees to reproduce and copy this document and other documents solely for the purpose of understanding this product.

PRECAUTION REGARDING FCC IN USA

Note: This equipment has been tested and found to comply with the limits for a Class A digital device, pursuant to part 15 of the FCC Rules. These limits are designed to provide reasonable protection against harmful interference when the equipment is operated in a commercial environment. This equipment generates, uses, and can radiate radio frequency energy and, if not installed and used in accordance with the instruction manual, may cause harmful interference to radio communications. Operation of this equipment in a residential area is likely to cause harmful interference in which case the user will be required to correct the interference at his own expense.

PRECAUTION REGARDING WIRELESS MODULE

It is strongly advised that the following safety measures must be observed to ensure the safe operation of the machine in case that wireless module is installed.

- **In Case that Wireless LAN / Wireless platter are equipped**

For Canada / USA ⚠ CAUTION

Changes or modifications not expressly approved by the party responsible for compliance could void the user's authority to operate the equipment. This transmitter must not be co-located or operated in conjunction with any other antenna or transmitter. This equipment complies with FCC/IC radiation exposure limits set forth for a controlled environment and meets the FCC radio frequency (RF) Exposure Guidelines and RSS-102 of the IC radio frequency (RF) Exposure rules. This equipment should be installed and operated keeping the radiator at least 20cm or more away from person's body (excluding extremities: hands, wrists, feet and ankles).

Under Industry Canada regulations, this radio transmitter may only operate using an antenna of a type and maximum (or lesser) gain approved for the transmitter by Industry Canada. To reduce potential radio interference to other users, the antenna type and its gain should be so chosen that the equivalent isotropically radiated power (e.i.r.p.) is not more than that necessary for successful communication.

The W52/W53 are restricted to indoor operation only.

Cet équipement est conforme aux limites d'exposition aux rayonnements énoncées pour un environnement contrôlé et respecte les règles les radioélectriques (RF) de la FCC lignes directrices d'exposition et d'exposition aux fréquences radioélectriques (RF) CNR-102 de l'IC. Cet équipement doit être installé et utilisé en gardant une distance de 20 cm ou plus entre le dispositif rayonnant et le corps (à l'exception des extrémités : mains, poignets, pieds et chevilles).

Conformément à la réglementation d'Industrie Canada, le présent émetteur radio peut fonctionner avec une antenne d'un type et d'un gain maximal (ou inférieur) approuvé pour l'émetteur par Industrie Canada. Dans le but de réduire les risques de brouillage radioélectrique à l'intention des autres utilisateurs, il faut choisir le type d'antenne et son gain de sorte que la puissance isotrope rayonnée équivalente (p.i.r.e.) ne dépasse pas l'intensité nécessaire à l'établissement d'une communication satisfaisante.

Les bandes W52 et W53 sont limitées à une utilisation en intérieur uniquement.

For Europe ⚠ CAUTION

The W52/W53 are restricted to indoor operation only.

SIGNAL WORDS (TYPES & MEANING)

The signal words shown in this manual are separated into two stages depending on the level of danger or the seriousness of potential injury. Fully understand the meanings of the signal words shown below and follow the directions as shown in this manual and on the stickers placed on the machine.

Signal Word	Meaning
DANGER	Indicates an imminently hazardous situation which, if not avoided, is likely to result in serious injury or may result in death. Additionally there may be severe property damage.
WARNING	Indicates a potentially hazardous situation which, if not avoided, will result in death or serious injury.
CAUTION	Indicates a potentially hazardous situation, which, if not avoided, may result in minor or moderate injury or in property damage.

Symbol	Meaning
NOTE	Indicates information that needs to be noted or emphasized.
REFERENCE	Indicates the reference page related to performance of an operation.
INFORMATION	Indicates information useful for the better understanding of the machine.

NOTICE FOR THE SOFTWARE PRODUCT

This product includes programs or software that Ishida Co., Ltd. (hereinafter referred to as "ISHIDA") holds the copyright or has been licensed from a third party (hereinafter referred to as "Software"). The Users need to comply with the following terms and conditions to use "Software" ("Software" may include open-source programs, free software, and/or programs licensed from a third party, which have the terms and conditions prescribed by a third party (hereinafter referred to as "Third Party Terms and Conditions"). The “Third Party Terms and Conditions” shall prevail, in the event of any conflict between the “Third Party Terms and Conditions” and the following terms and conditions, any agreement between the ISHIDA and the User, or other agreements.). The Users are deemed to have agreed to the following terms and conditions at the time of installation provided the Software requires installation, otherwise at the time of when the Users start up using the product.

TERMS AND CONDITIONS

1. The Users shall not copy, transmit to the public and/or transfer (including to transfer to the other devices) the “Software”, or assign or lend the “Software” to any third party separately from the product, except written permission by ISHIDA.
2. The Users shall not modify, change, reverse engineer, decompile, disassemble, or make any change to the current “Software” (hereinafter referred to as the "Modification") by yourself or through a third party. Even if any defect or breakdown occurs due to the “Modification”, ISHIDA and dealers (including but not limited to ISHIDA’s subsidiaries, distributors, sales representatives, agents, licensees, vendors etc.) do not guarantee anything in the “Software”. In addition, even if any damage occurs to the Users as a result of the “Modification”, ISHIDA and dealers would not be liable.
3. The "Software" is licensed to the Users by ISHIDA. ISHIDA does not assign and transfer any right of “Software” to the Users. The Users shall not assign and transfer or sublicense the right of “Software” to any third party.
4. ISHIDA AND DEALERS WOULD NOT WARRANT THAT THE "SOFTWARE" HAS NO ERRORS, BUGS, OR OTHER DEFECTS, THAT THE "SOFTWARE" WILL OPERATE WITHOUT INTERRUPTION, THAT THE "SOFTWARE" WILL CONFORM TO THE USER'S SPECIFIC PURPOSE, AND THAT THE "SOFTWARE" WILL NOT CAUSE ANY DAMAGES TO THE USERS OR A THIRD PARTY.
5. EXCEPT FOR DAMAGES OR LOSSES RESULTING FROM THE GROSS NEGLIGENCE, WILLFUL DEFAULT OR FRAUD OF ISHIDA OR DEALERS REGARDING THE USE OF “SOFTWARE”, IN NO EVENT WILL ISHIDA AND DEALERS BE LIABLE FOR ANY SPECIAL, INDIRECT, PUNITIVE, INCIDENTAL OR CONSEQUENTIAL DAMAGES OR LOSSES (INCLUDING WITHOUT LIMITATION LOSS OF USE, DATA, PROFIT, SAVINGS OR BUSINESS), EVEN IF ADVISED OF THE POSSIBILITY OF SUCH DAMAGES OR IF SUCH POSSIBILITY WAS REASONABLY FORESEEABLE. WHATEVER THE BASIS OF THE CLAIM OR ACTION (SUCH AS BREACH OF WARRANTY, CONDITION, CONTRACT, INFRINGEMENT AND TORT, INCLUDING STRICT LIABILITY AND NEGLIGENCE, OR OTHER LEGAL THEORY), THE TOTAL AMOUNT OF COMPENSATION FOR ISHIDA AND DEALERS WITH RESPECT TO THE USE OF THE "SOFTWARE" SHALL BE LIMITED TO THE SALES AMOUNT OF THE PRODUCT.
6. If the Users export the “Software” out of the country in which the “Software” was initially installed, the Users shall comply with all laws and regulations related to domestic and foreign export controls at the Users’ own cost.
7. In addition to the above, the Users shall use the “Software” in compliance with the instruction manual for the product.
8. Please note that if the Users would not agree to any of the above terms and conditions, or if the Users would violate any of the above terms and conditions, ISHIDA may terminate the license of the "Software" and may prohibit the Users from using the product.

PRECAUTIONS FOR USE

For safe operation, the following safety considerations must be observed:

WARNING

- **Places subject to low temperature and low humidity, or high temperature and high humidity**
- **Places exposed to direct sunlight**
- **Places subject to the splashing of water**

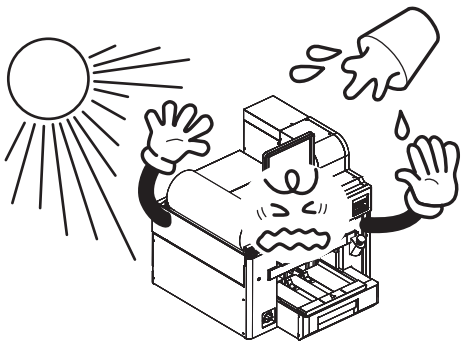

- **Places exposed to strong vibration**

  Places where the floor or ground is unstable

- **Places exposed to direct chill air**

  Places exposed to direct chill in the air from cooling equipment such as air conditioners and refrigerators.

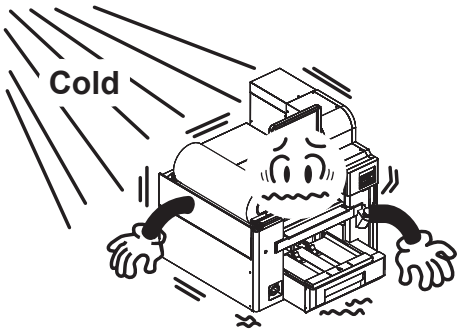

- **Places with much litter or dust**
- **Places where the voltage fluctuation is large**

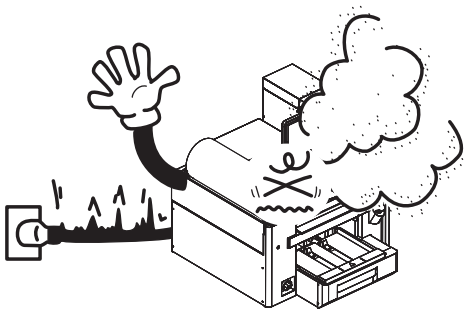

- **Around the ozone source such as an ozone sterilizer**

WARNING

- Contact your local ISHIDA service agent for installation of the machine.

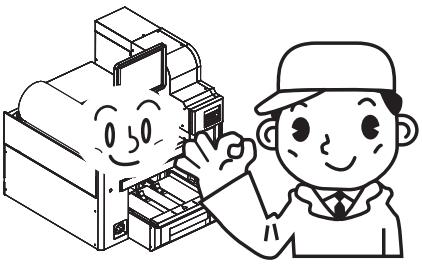

- When you move the machine, contact your local ISHIDA service agent.

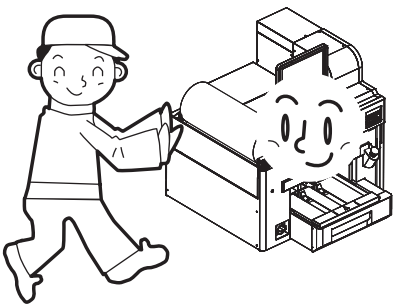

About the load capacity of the base or table

WARNING

- When installing the machine on a base or table other than the optional dedicated base, make sure that the load capacity is 200 kg or more. When placing objects other than the machine on the same base or table, make sure that the value obtained by subtracting the weight of such objects from the load capacity is 200 kg or more.

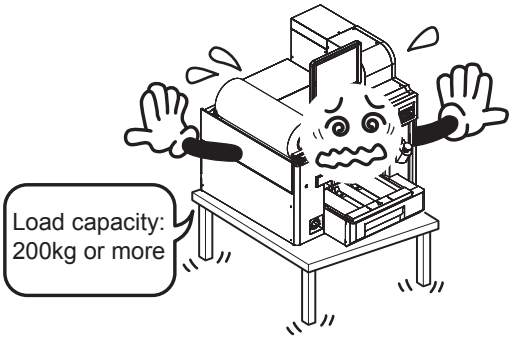

Regarding the Power Source

WARNING

- For the power source, use either a single-phase 200-240VAC or a three-phase 200-240VAC.
- Power sources with voltage fluctuation may be a cause of machine malfunction.
- Do not stand on, or place heavy objects on the power cable.
  Damage to the cable and its continued use may cause an accident or trouble.
- Unplug the power cable from the outlet when not in use for a long period of time.
  Failure to do so may cause a fire.

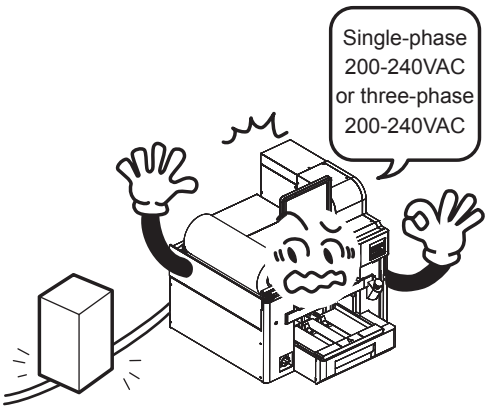

Regarding Jacks for Fixing the Machine

WARNING

- Once the machine has been installed, do not remove the jacks affixing the machine.
  As casters are affixed, this machine may move during production work.
  Also, this may lead to a reduction in wrapping capability.

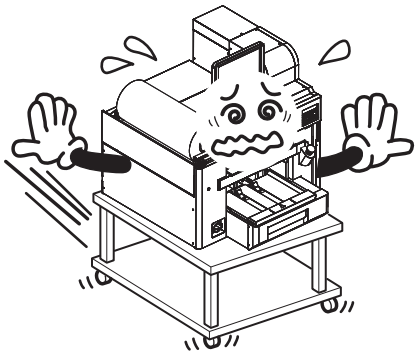

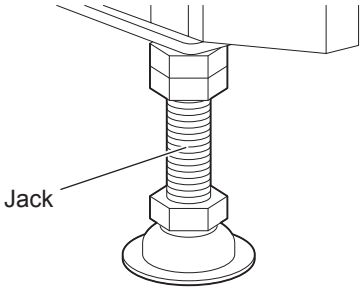

Regarding the Level Gauge

WARNING

- Always ensure this machine is level.
  If the level gauge is not used to correctly level the machine, erroneous weighing readings may occur and may be a cause of wrapping failure.
  If the machine is not horizontally even, adjust using the four jacks used for fixing the machine.
  The level gauge is located beneath the weighing platter.

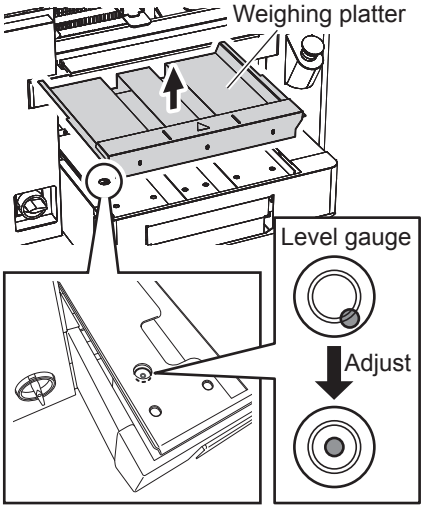

Providing sufficient installation space

WARNING

- Allow ample installation space on either side of the machine to ensure easy access for maintenance.

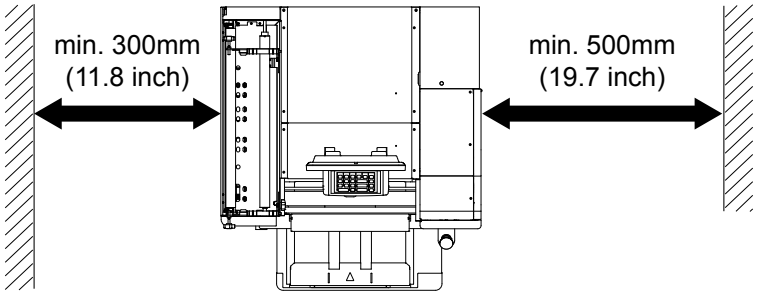

[LL type]	With liner:	W800 x D865 mm
	Linerless:	W825 x D865 mm
[L type]	With liner:	W745 x D865 mm
	Linerless:	W770 x D865 mm

- Disposal of the packaging materials should follow the local rules regarding separation of waste materials.

WARNING STICKERS

Warning stickers are affixed to the machine to warn operators of possible dangers. Described here are the meanings and handling precautions of these warning stickers.

WARNING

Keep these stickers clean at all times.
Take precautions to ensure that they do not become unreadable or peel off.

Meaning of the Warning Stickers

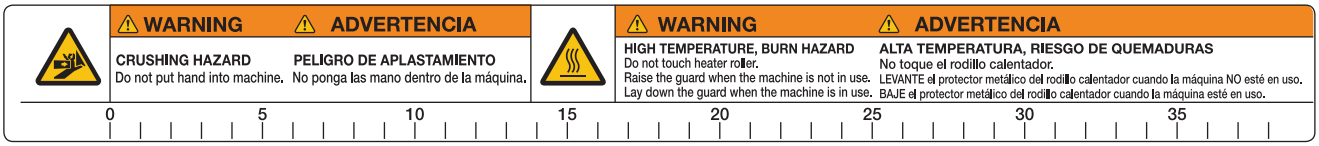

Warning stickers are affixed to the machine to warn operators of possible dangers. Described here are the meanings and handling precautions of these warning stickers.

In case you have to put your hand(s) in the machine during operation or in case you hear strange noises from the machine, or when there is a possibility that a dangerous situation may occur if you leave the machine on, press the emergency stop button, and then continue the maintenance operation.

When you take out commodity items left inside the machine or when you touch the machine except for key operation, press the emergency switch.

This is attached at the infeed unit. The infeed table moves during weighing, so keep your hand(s) away from the infeed table. It may pinch your fingers or hands.

Attached to the film cutter part.
Do not touch the film cutter part, as there is a risk of cutting your fingers.

This is attached at the film cutter unit. When you touch the film cutter part, it will cut your finger, please do not touch it.

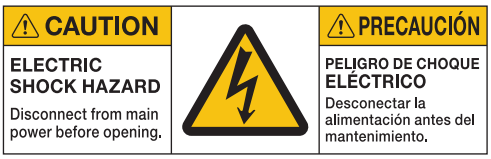

This is attached at the right side of the machine.
As there is a risk of electric shock, do not open the cover.

These are attached at every place there is a danger for operators' hands or fingers to be pinched. Please follow this manual for proper operation.

Positions of Warning Stickers and Handling Precautions

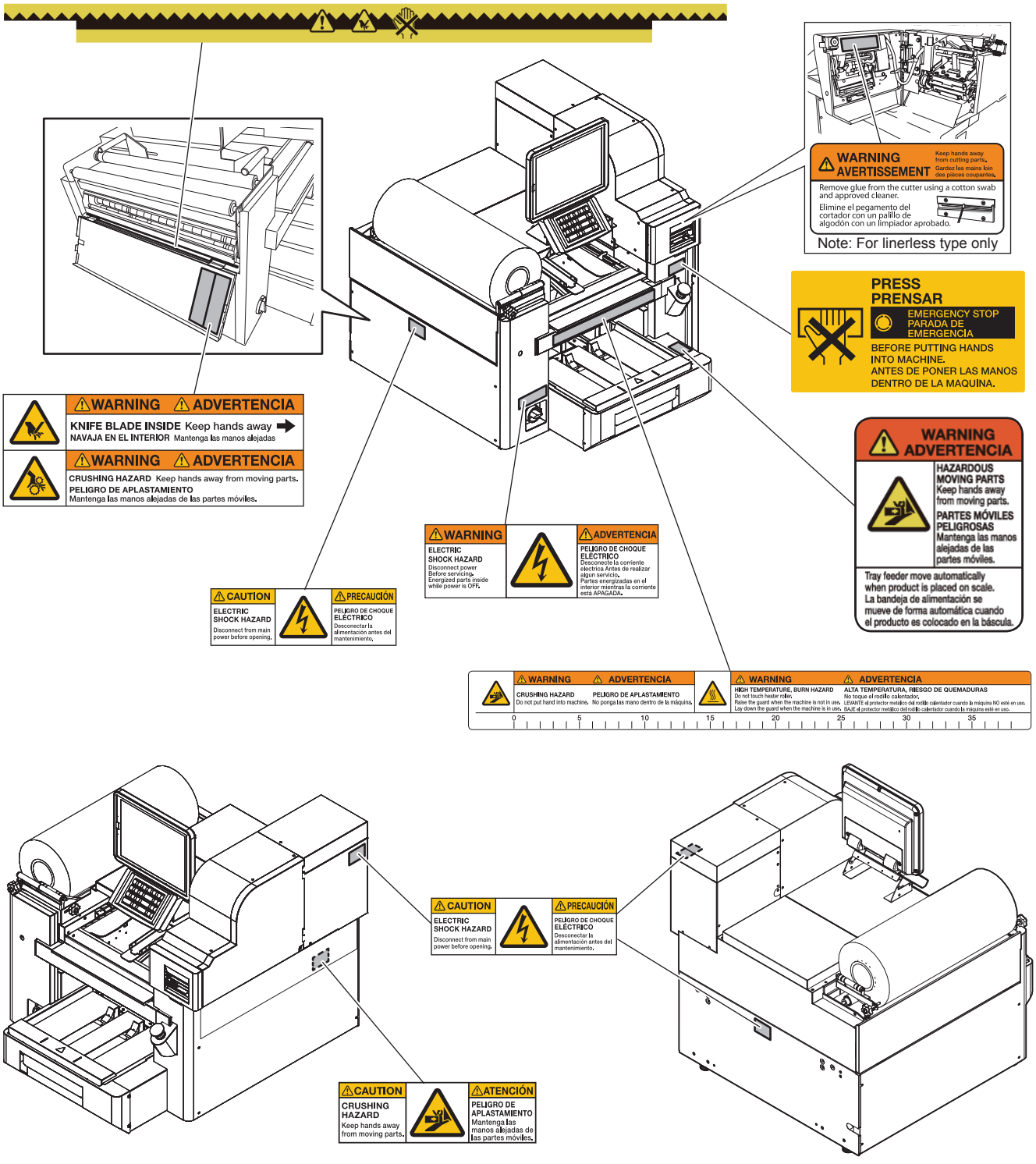

Cut-off and Display of the Power Source

- For safety, please shut down the power before performing maintenance on the machine.
- Please be careful because even when the switch is turned to the "OFF" position, there is still electric power inside the machine.
- In order to prevent other persons from starting up the machine during the service work, the following steps are recommended. Lock up the power switch at the “OFF” position. Make a warning tag for preventing an accident and place it at the power switch.
- Refer to the images below when you place the lock and the tag.

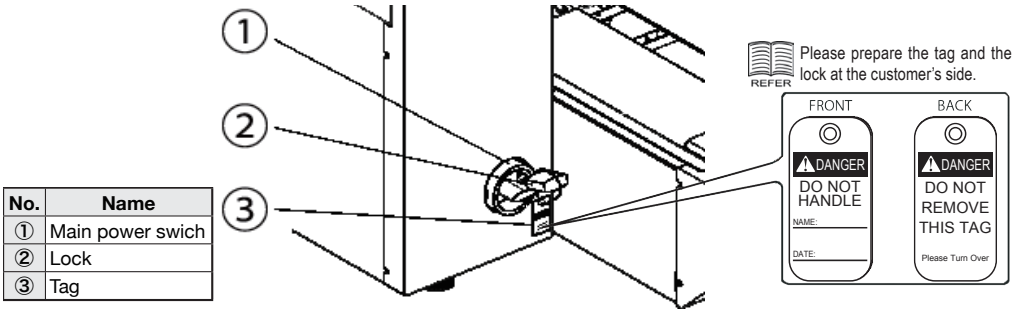

No.	Name
①	Main power swich
②	Lock
③	Tag

General Notes

This section describes general precautions for safe use of the machine.

⚠ DANGER

- Do not press switches and buttons with a wet hand. Doing so may result in electric shock.
- Electrical work should be performed by an electrical constructor or by a person qualified in electrical engineering.
- Do not touch any conducting part while power is being supplied. Doing so may result in electric shock.
- Maintenance and inspection should be performed by an electrical maintenance person. Maintenance and inspection performed by a person who is not qualified may result in electric shock or be a cause of malfunction to the machine.

⚠ WARNING

- Operators of this machine should tie long hair into a bundle, wear a cap and wear appropriate clothes and shoes for this type of work. Any long hair or inappropriate clothing may become caught in rotating parts of this machine which may lead to injury.
- Before operating this machine, ensure that every cover has been mounted.
- Turn the power switch OFF when performing instruction and repair of parts other than those specifically instructed.
- Wait for a while prior to performing any inspection on this machine following turning-off of the power switch. Even if power is cut, parts of the machine may remain hot. Also, if other devices are connected to this machine in the pre-process or post-process areas, ensure powers to all devices have been cut off.
- To prevent other people around you from wrongly starting the power supply or moving devices, ensure you have given clear instructions that maintenance and inspection are being performed to those around you.

⚠ CAUTION

- Do not operate this machine while placing tools and other items on top of the machine. Doing so may cause these items to fall into the moving parts of the machine causing damage to the machine.
- When performing maintenance and inspection, wear appropriate work clothes. Also, avoid wearing cotton work gloves.
- Do not touch this machine or its packaging materials with dirtied hands through the handling of food, etc. Doing so may be a cause of microbial contamination.

Handling Precautions

WARNING

- **Do not put your hand(s) into the infeed unit or wrapper.**

  Do not put your hand(s) in the infeeding, weighing, or wrapping areas. If you need to put your hand(s) inside the wrapping area to remove something from the infeeding, weighing, or wrapping area, be sure to press the emergency stop button first. Never put your hand(s) inside the wrapping area as your hand(s) may become caught in the machine.

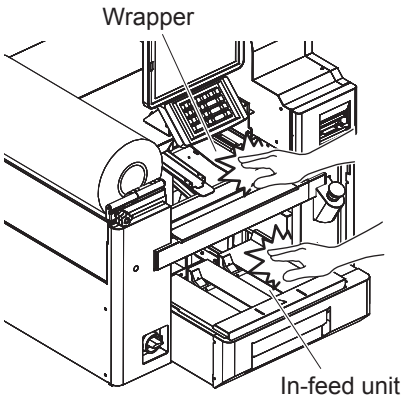

- **Keep your hand(s) away from the film cutter.**

  When you need to change the film or do anything near the film cutter, always press the emergency stop button first. Grievous injury may ensue should the film cutter jump out and cut your hand.

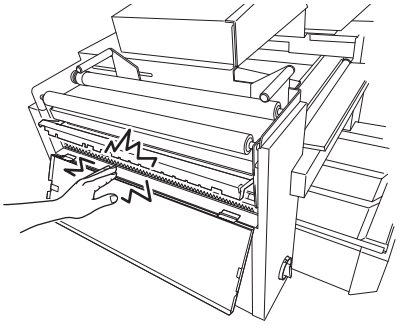

- **Do not touch, or allow clothing to touch the discharge heater unit.**

  The heater will remain hot during operation and even for some time even after the power is switched OFF. Touching the unit during this time may cause burns.

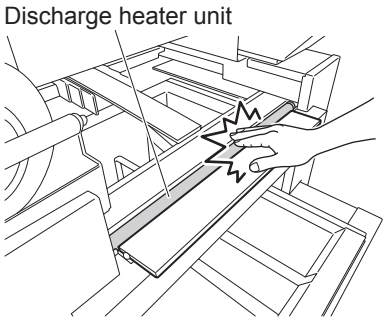

- **Do not disassemble or make any alterations to the machine.**

  The machine can be damaged if disassembled incorrectly. Making any alterations without permission, or removing any parts other than those specified, may cause a serious accident or injury. (ISHIDA will not guarantee the subsequent quality of the machine)

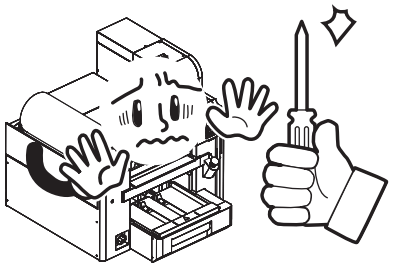

WARNING

- **Do not insert or pull out the power plug with wet hand.**
  Doing so may cause a short circuit or electric shock.

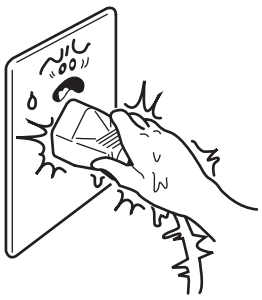

- **Do not fabricate the plug for power supply or power cable.**
  Doing so may cause a fire or electric shock.

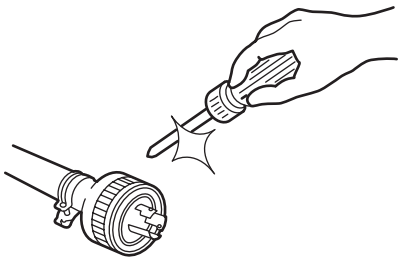

- **Do not pull or damage the power cable or use other power cables not specific to the machine.**
  Doing so may cause the core cables to be damaged. This may cause a fire or electric shock.

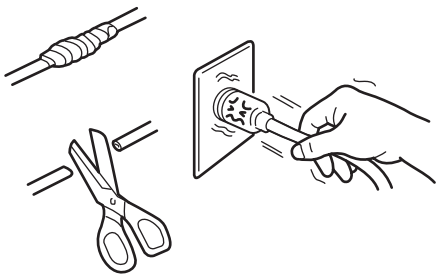

- **Do not spill water directly on the machine**
  Doing so may cause electric shock or machine failure.

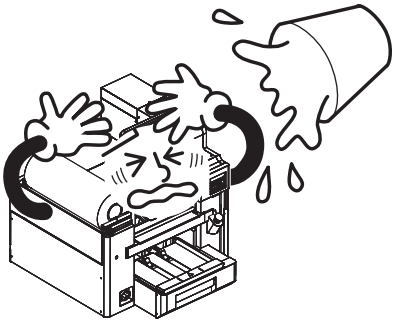

WARNING

- **When cleaning the floor or performing activities which use water, ensure that the water doesn't splash on to the machine.**

  Doing so may cause machine failure or dirt to stick to the machine.

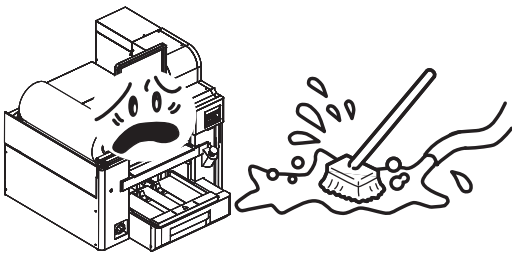

- **Always switch OFF the main power before performing any cleaning.**

  Your hand may be caught in the moving parts of the machine such as the chain of the weighing unit.

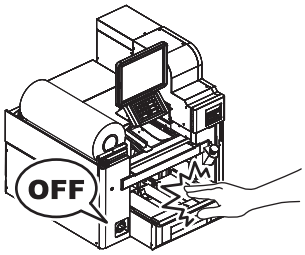

- **When disinfecting or bleaching the area around the machine, make sure that the chemical is not applied directly to the machine.**

  Inappropriate use of the chemical may cause machine failure, etc., so dilute the chemical to the concentration specified by the manufacturer.

⚠ CAUTION

- **Handle with care as this is a precision machine.**
  Bumps or shocks to the machine may cause damage and lower the wrapping speed.

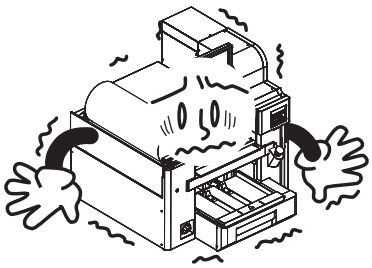

- **Do not remove or damage the warning stickers.**
  If the warning stickers are damaged in any way, contact your ISHIDA representative.

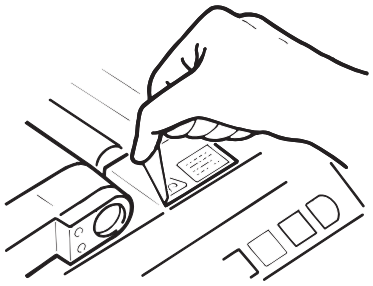

- **Do not apply strong force to the machine or printer unit.**
  Doing so may cause deformation or machine failure.

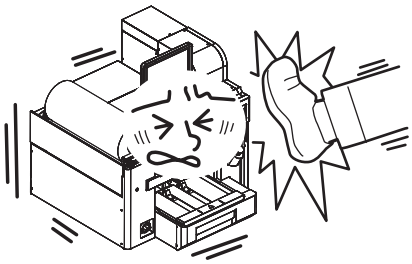

- **Do not place heavy objects on the conveyor or stand on the machine.**
  Doing so may cause deformation or machine failure.

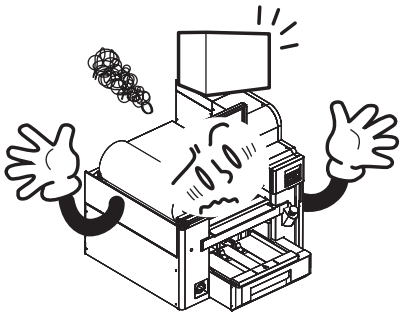

- **Store films and labels in hygienic places and avoid locations of high-temperature, high-humidity.**
  Doing so may cause wrapping failure and labeling error.

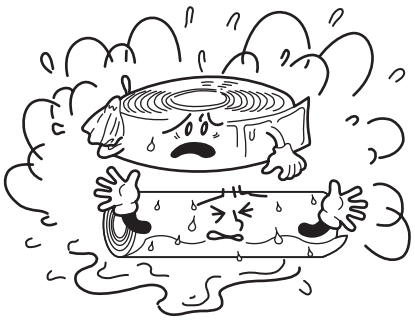

WARNING

- **If abnormalities such as a burnt smell are detected, stop use of the machine, switch the main power OFF and pull the power cable from the socket.**

  Continued use of the machine may be a cause of fire or machine failure. Stop use of the machine and contact your ISHIDA representative.

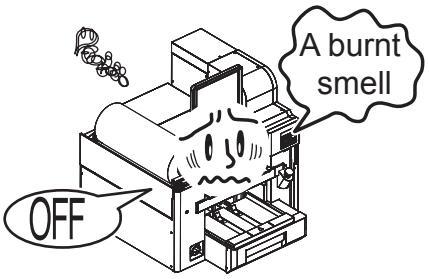

- **Do not pull out or insert the power cable of the machine when main power is ON.**

  Doing so may cause machine failure.

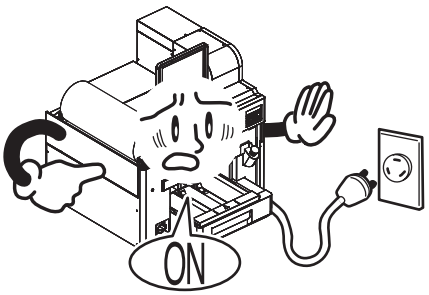

- **Do not perform erroneous printing of the label size.**

  Printing wider than the label width may cause fire or burnout of the printing roller or thermal head.

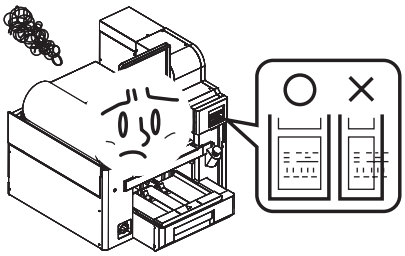

HOW TO USE THIS MANUAL

Shut off the power supply of this machines to secure the safety of the operator before any maintenance and inspection. Screens of the machine used in this manual are examples only. The position, size, and color of buttons and displays may have been changed depending on the settings.

Format of Procedure Explanation

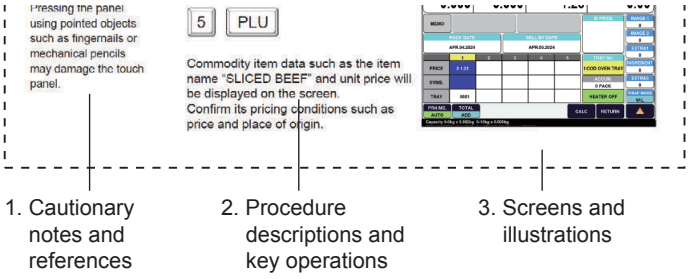

1. On the left-side of each page are any precautions, reference information and reference pages important to the explanation.
2. Operational procedures are first explained and below them, the key operations are shown.
3. Screen displays or illustrations are shown corresponding to the operational procedure.

Regarding the Key Displays of this Manual

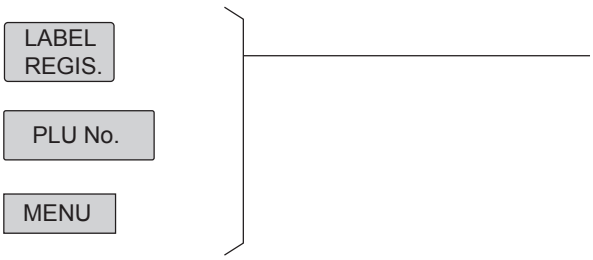

The touch keys of the touch panel in this manual are shown in striped form.

* When numeric keys are shown followed immediately by a touch-key, this shows that successive action should be performed.

TABLE OF CONTENTS

IMPORTANT NOTICE III
PRECAUTION REGARDING FCC IN USA IV
PRECAUTION REGARDING WIRELESS MODULE IV
SIGNAL WORDS (TYPES & MEANING) V
NOTICE FOR THE SOFTWARE PRODUCT VI
TERMS AND CONDITIONS VI
PRECAUTIONS FOR USE VII
WARNING STICKERS XI
HOW TO USE THIS MANUAL XX
TABLE OF CONTENTS XXI

CHAPTER 1 BEFORE USING THE MACHINE 1-1
1.1 NAME AND FUNCTION OF EACH PART 1-2
1.1.1 External Appearances 1-2
1.1.2 Accessories 1-2
1.1.3 Stroke Keys 1-3
1.2 USABLE LABELS 1-3
1.3 USABLE TRAYS / FILMS 1-4
1.3.1 External Appearance 1-4
1.3.2 Film Types 1-4
1.4 DAILY MAINTENANCE 1-5
1.5 MACHINE CLEANING 1-6
1.5.1 Precautions for Cleaning 1-6
1.5.2 Disassembly and Cleaning 1-6
1.5.3 Assembly 1-9
1.5.4 Cleaning the Cutter Unit (Linerless) 1-10
1.5.5 Operation Check 1-13
1.6 OPERATION START / END 1-15
1.6.1 Starting Operation 1-15
1.6.2 Ending Operation 1-16
1.7 FILM LOADING / REPLACEMENT 1-17
1.7.1 Film Loading 1-17
1.7.2 Film Replacement (Film Width Change) 1-20
1.7.3 Removing Film Wrapped Around Roller 1-24
1.8 LABEL SETTING (WITH LINER) 1-26
1.9 LABEL SETTING (LINERLESS) 1-29
1.10 DEFINITION OF TARE WEIGHT 1-32

CHAPTER 2 BASIC OPERATIONS 2-1
2.1 PRODUCTION MODE SCREEN 2-2
2.1.1 Display Fields on Initial Screen 2-2
2.1.2 Touch Keys on Initial Screen 2-3
2.2 WEIGHING, WRAPPING, LABELING 2-4
2.2.1 Weighing, Wrapping, Labeling 2-4
2.2.2 Wrapping Only 2-6
2.2.3 Labeling Only (Manual) 2-7

CHAPTER 3 USEFUL FUNCTIONS 3-1
3.1 CALLING ITEM DATA FROM DISPLAYED LIST 3-2
3.1.1 Searching and Calling Items 3-3
3.2 CALLING ITEM DATA WITH MEMO PRESET KEYS 3-4
3.2.1 Registering Memo Preset Keys 3-4
3.2.2 Calling Items by Using Memo Preset Key 3-5
3.3 CHANGING AND ADDING ITEM DATA 3-6
3.3.1 Changing Unit Prices 3-6
3.3.2 Entering Tray Numbers in Tray Field of Price List 3-7
3.3.3 Entering Selling Prices in Price Field of Price List 3-8
3.3.4 Changing Trays on Tray List Screen 3-9
3.3.5 Changing Symbols for Fixed Price Items 3-10
3.3.6 Performing Discount Processing 3-11
3.4 CHANGING LABEL DATES AND TIMES 3-12
3.5 CHECKING LABEL PRINTING CONTENT 3-14
3.6 USEFUL FEATURES OF FUNCTION KEYS 3-15

CHAPTER 4 DATA REGISTRATION 4-1
4.1 PROGRAM MENU 4-2
4.2 PLU REGISTRATION 4-3
4.2.1 PLU Detail (SALE 1) Registration 4-4
4.2.2 PLU Detail (MSG.) Registration 4-5
4.2.3 PLU Detail (IMAGE) Registration 4-6
4.2.4 PLU Detail (PRINT) Registration 4-7
4.2.5 PLU Detail (DATE) Registration 4-8
4.2.6 PLU Detail (CODE) Registration 4-9
4.2.7 PLU Detail (WRAP) Registration 4-11
4.2.8 PLU Detail (SCHEME) 4-12
4.2.9 PLU Detail (TARGET) 4-13
4.3 CAMPAIGN REGISTRATION 4-14

4.4 TRAY REGISTRATION 4-16
4.4.1 Tray List Screen Registration....4-16
4.4.2 Manual Tray Registration....4-17
4.4.3 Tray Name Registration....4-20
4.5 PRESET KEY REGISTRATION 4-21
4.5.1 Setting Preset Groups and Pages 4-22
4.5.2 Setting Preset Keys 4-22
4.5.3 Changing Preset Key Sizes and Positions 4-23
4.5.4 Editing Preset Keys....4-24
4.5.5 Deleting Preset Keys 4-26
4.6 SCHEDULE REGISTRATION 4-27
4.7 STORE REGISTRATION....4-29
4.8 DEPARTMENT REGISTRATION 4-31
4.9 GROUP REGISTRATION....4-33
4.10 NUTRITION REGISTRATION 4-35
4.11 EXTRA MESSAGE REGISTRATION 4-37
4.12 SCHEME TABLE REGISTRATION 4-39
4.12.1 Scheme Table / Detail (Control) Screen Registration 4-41
4.12.2 Scheme Table / Detail (Basic) Registration 4-42
4.12.3 Scheme Table / Detail (Attribute) Registration....4-43
4.13 GEN TABLE REGISTRATION....4-44
4.14 LOOKUP TABLE REGISTRATION....4-46
4.15 MINCE TRACE REGISTRATION 4-49
4.16 FIXED PRICE SYMBOL REGISTRATION 4-50
4.17 LABEL DATA CHECK....4-52
4.18 NUTRITION TEXT REGISTRATION 4-53
4.19 CHARACTER ENTRY METHOD....4-55
4.19.1 Text Editing....4-57
4.19.2 Font Style Selection....4-58
4.19.3 Line Data Deletion 4-59
4.19.4 Data Erasure....4-60
4.19.5 Data Copy....4-61

CHAPTER 5 DATA AGGREGATION 5-1
5.1 SWITCHING TO TOTAL MODE 5-2
5.2 TOTALS 5-3
5.3 GRAND TOTAL 5-4
5.4 TOTALS PER DEPARTMENT 5-5
5.5 DESIGNATED ITEM TOTALS 5-6
5.6 TOTALS PER TYPE 5-7
5.7 TOTALS PER HOUR 5-9
5.8 TOTALS PER WRAPPING MODE 5-10
5.9 TOTALS PER TRAYS 5-11
5.10 TOTAL CLEAR 5-12

CHAPTER 6 TOTAL DATA CORRECTION 6-1
6.1 SWITCHING TO SUBTRACTION MODE 6-2
6.2 SUBTRACTION BY NUMERICAL ENTRY 6-3
6.3 ADDITION BY NUMERICAL ENTRY 6-4

CHAPTER 7 SETTING MODE 7-1
7.1 SWITCHING TO SETUP MODE 7-2
7.2 PASSWORD SETTINGS 7-3
7.3 KEY LOCK SETTINGS 7-4
7.4 DATA STORAGE SETTINGS 7-5
7.5 PLU OVERWRITE SETTING 7-6
7.6 PLU INITIAL DATA SETTING 7-7
7.7 PLU UPDATE SETTING 7-8

CHAPTER 8 ADJUSTMENT MODE 8-1
8.1 SWITCHING TO ADJUSTMENT MODE 8-2
8.2 DATE AND TIME ADJUSTMENT 8-3
8.3 TOUCH SCREEN ADJUSTMENT 8-4
8.4 SCREEN BRIGHTNESS ADJUSTMENT 8-5

APPENDIX OTHERS APP-1
A-1. SPECIFICATIONS APP-2

CHAPTER 1

BEFORE USING THE MACHINE

1.1 NAME AND FUNCTION OF EACH PART

This section describes the name and function of each part of this machine. The names and functions of each part of the machine are explained below. In this manual, the following names for each part are used.

1.1.1 External Appearances

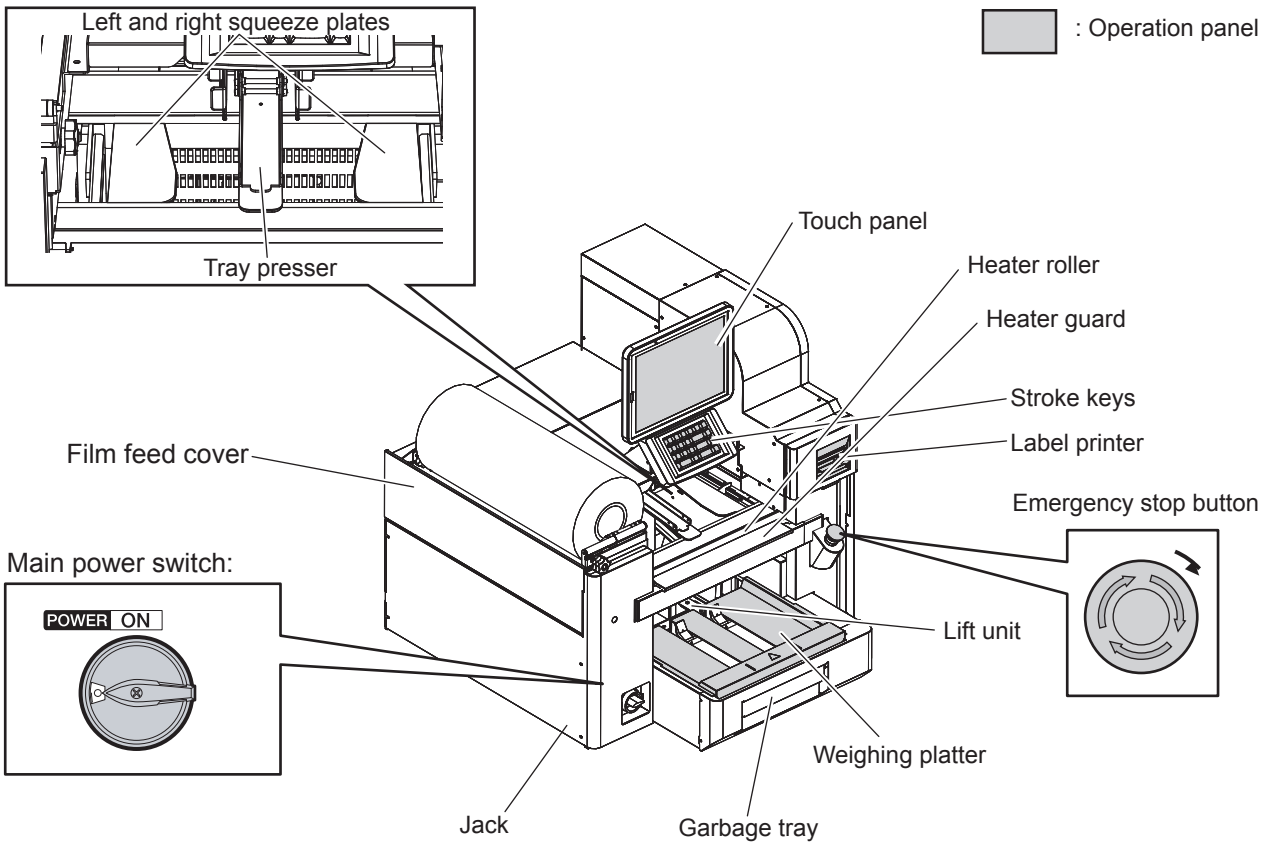

1.1.2 Accessories

With liner

- User's Manual (this manual): 1
- Precaution Manual: 1
- Hexagonal screwdriver: 1
- Empty bottle for IPA and cotton swab set: 1
- CE Declaration of Conformity (EU only): 1

Linerless

- User's Manual (this manual): 1
- Precaution Manual: 1
- Hexagonal screwdriver: 1
- Empty bottle for IPA and cotton swab set: 1
- CE Declaration of Conformity (EU only): 1
- Cotton swab and cloth set: 1
- Cleaning Manual (US: English, EU: Italian): 1

1.1.3 Stroke Keys

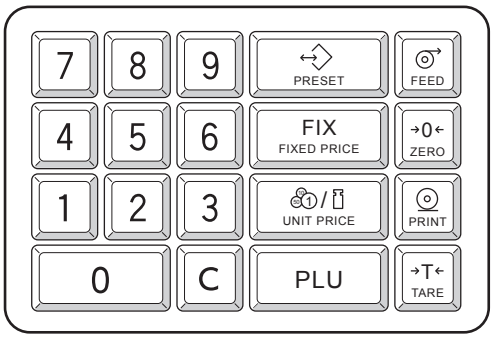

PRESET	Displays the memo preset screen.
FIX FIXED PRICE	Changes the fixed price, or changes from a unit price item to a fixed price item.
UNIT PRICE	Changes the unit price, or changes from a fixed price item to a unit price item.
PLU	Calls pre-registered data such as commodity items, POPs, and comments.
C	Erases the entered numerical data or reset the error.
FEED	Feeds labels.
→0← ZERO	Corrects the zero point of the weighing unit.
PRINT	Issues labels.
→T← TARE	Changes the weight of inserts in a tare.

1.2 USABLE LABELS

Be sure to use designated labels that are compatible with the machine.

	With liner	Linerless
Temperature	5 to 35 ˚C	5 to 30˚C
Humidity	20 to 85 % RH	30 to 75 % RH
Label horizontal dimension	33 to 80 mm	44, 60, 80 mm
Label vertical dimension	23 to 105 mm	30 to 500 mm Note: Labels with a height of 105 mm or more require assistance for issuance (support the label posture by hand).
Outside diameter	125 mm	
Internal diameter	40 ±1 mm	

⚠ CAUTION If label paper outside the specified range is used, labels may not print correctly, or paper may not be fed smoothly.

1.3 USABLE TRAYS / FILMS

Use trays and films specifically designed for this machine.

1.3.1 External Appearance

■ Unstable Trays

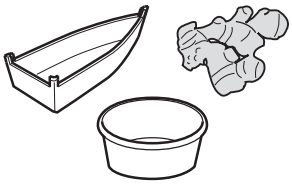

● Specially shaped trays
These trays cannot be used because it is difficult to adjust the feed and film tension.

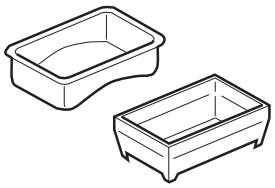

● Round-bottomed trays
These trays cannot be used because labels cannot be attached to the film.

■ Filling trays

The quality of wrapping depends largely on how well the trays are filled. To maintain stable wrapping, avoid filling as in the examples below.

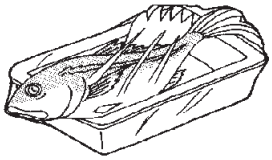

● Contents protruding from the tray

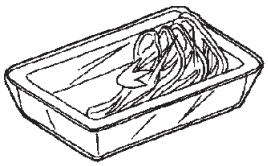

● Unevenly distributed contents in the tray

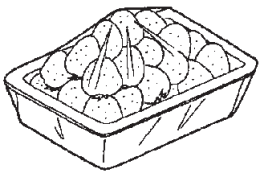

● Overfilled contents in the tray

■ Available Tray Size

- Width LL type 150 to 380 mm
  L type 150 to 350 mm
- Depth 127 to 244 mm
- Height 10 to 130 mm

> ⚠ CAUTION
> Although the usable tray dimensions are as above, trays of maximum allowable value (max. width 380 mm by max. depth 244 mm) or minimum allowable value (min. width 150 mm by min. depth 127 mm) cannot be used in LL type, and trays of maximum allowable value (max. width 350 mm by max. depth 244 mm) or minimum allowable value (min. width 150 mm by min. depth 127 mm) cannot be used in L type. Depending on the shape, material, or weight of the tray, wrapping may not be possible even if it is within the allowable range. A tray should be placed in the center of the weighing platter, not on either side of the platter. Placing the tray on either side of the weighing platter may result in wrapping defects.

1.3.2 Film Types

Use the following films recommended by ISHIDA.

A50: Width 400, 450, 500mm
ISHIDA Wrap Super: 400, 450, 500mm

> ⚠ CAUTION
> Use of films other than those specified by ISHIDA may cause wrapping defects.
> For more information on films, please contact your ISHIDA service agent.

1.4 DAILY MAINTENANCE

⚠ CAUTION When performing daily maintenance, be sure to turn off the main power switch. The discharge heater remains hot for some time after operation. Do not touch it directly with your hand.

Daily maintenance is vital to ensure a prolonged use of this machine and to prevent problems and breakdowns from occurring. After work, clean the machine and its surroundings every day to keep them clean at all times.

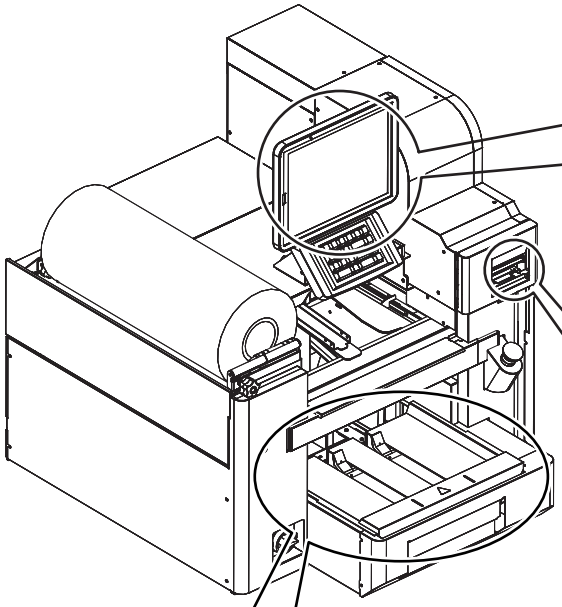

Wipe the screen and outside plates of the machine with a dry cloth. If food residue is present, wipe it off clean with an alcohol-treated cloth. Do not use chemicals such as thinner and benzene.

Clean the lift unit, weighing platter, and garbage tray of the infeed unit section.
For detailed cleaning instructions, see “Machine Cleaning” on page 1-6.

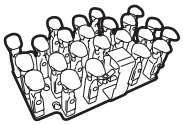

Lift unit

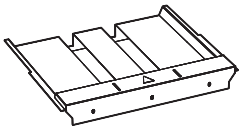

Weighing platter

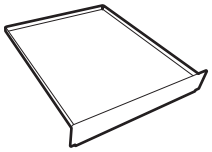

Garbage tray

In addition, clean the weighing areas in the infeed unit.
For detailed cleaning instructions, see “Machine Cleaning” on page 1-6.

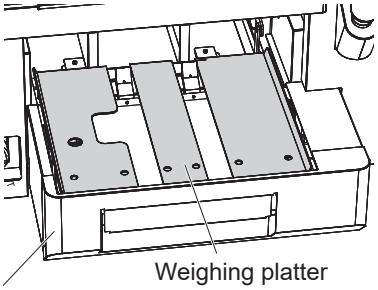

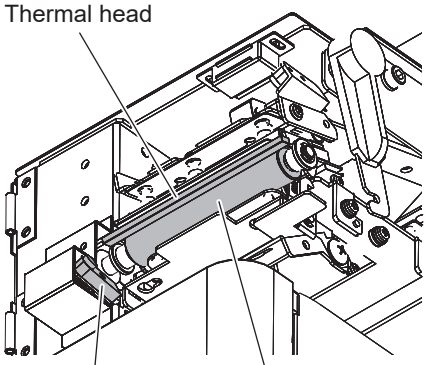

Regularly clean the thermal head, label sensor, and printing roller of the label printing section. To clean these parts, dip the supplied felt-tip pen in cleaning solution and gently wipe them clean.
For detailed cleaning instructions, see “Machine Cleaning” on page 1-6.

⚠ CAUTION No lubrication is required for each drive unit.
Do not pour water directly on the machine. Doing so may cause malfunction.

1.5 MACHINE CLEANING

This section describes how to disassemble each part, how to clean it, and how to check its operation after cleaning.

1.5.1 Precautions for Cleaning

This section describes precautions that must be followed to keep the machine clean.

⚠ CAUTION

- Be sure to turn off the main power switch before cleaning. The discharge heater remains hot for some time after operation. Therefore, make sure that the heater has cooled down before cleaning.
- Personnel cleaning the machine should tie up long hair, wear a hat, and wear appropriate clothing and shoes.
- Be sure to wash your hands and wear hygienic gloves before cleaning work.
- Wet the cloth with a neutral detergent and wring it thoroughly before use.
- Be sure to sterilize areas that come in direct contact with food or trays by spraying them with alcohol (80 vol%).
- If the numeric keypad becomes dirty during use, clean it accordingly and use the keypad cover.

1.5.2 Disassembly and Cleaning

This section describes how to clean each part of the machine following the disassembly procedure.

1. Touch [CLEANING] from the pop-up function [△] on the screen.

The cleaning mode screen is displayed.

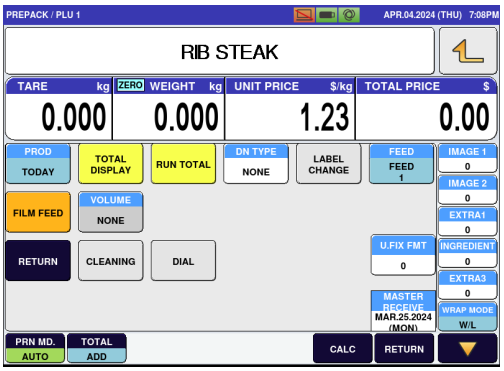

INFORMATION

By touching [▽] you can return to the production screen.

2. Touch [START] on the cleaning mode screen.

When the cleaning mode is executed, the lift unit and right, left, and back squeeze plates move.
The discharge pusher and left, right, and back squeeze plates are released and can be moved manually.

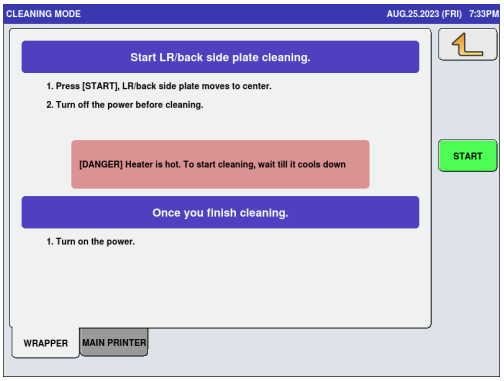

WARNING

The discharge heater remains hot for some time after the main power is turned off. Do not allow your hand, clothing, etc. to come into contact with the machine.

3. Turn OFF the main power switch on the left side of the machine.

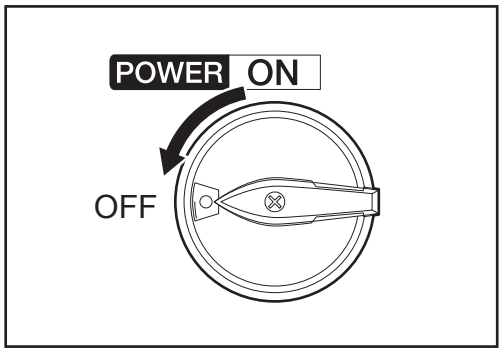

WARNING

The discharge heater remains hot for some time after operation. Wait at least about 30 minutes and make sure that the heater has cooled down before cleaning.

4. Clean the heater guard.

Lift the heater guard and wipe it clean using a cloth.
If food residue is present, wipe it clean using an alcohol-treated cloth.

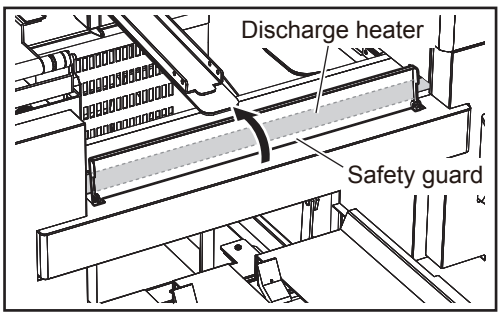

5. Clean the tray presser.

If the back of the tray presser is dirty, wipe it clean using a cloth.
If food residue is present, wipe it clean using an alcohol-treated cloth.

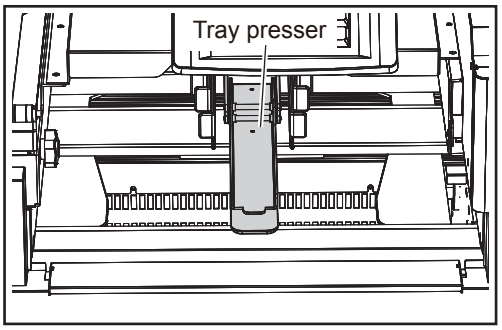

CAUTION

When moving the left and right squeeze plates, be careful not to get your hands caught between the plates.

6. Clean the left and right squeeze plates.

Pull out the left and right squeeze plates inward and wipe them clean using a cloth. If food residue is present, wipe it clean using an alcohol-treated cloth. After wiping, move the left and right squeeze plates to their original positions.

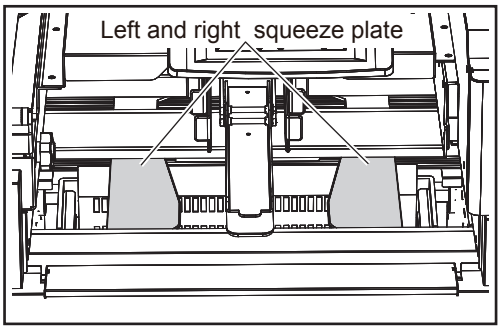

7. Clean the weighing platter.

Remove the weighing platter and rinse it with water or wipe it clean using a cloth.
If food residue is present, wipe it clean using an alcohol-treated cloth.

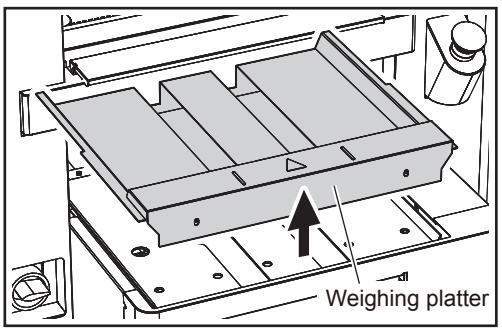

8. Clean the garbage tray.

Remove the garbage tray and rinse it with water or wipe it clean using a cloth.
If food residue is present, wipe it clean using an alcohol-treated cloth.

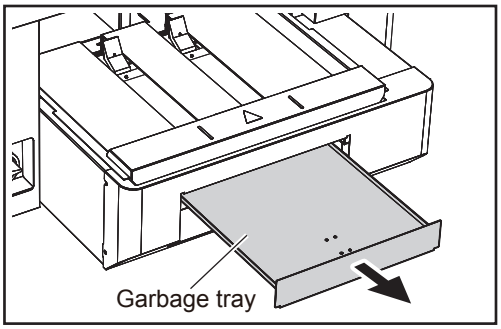

⚠ CAUTION

When installing the lift unit, be careful not to bump it against the surrounding areas.

9. Clean the lift unit.

Remove the lift unit and rinse it with water. Spray alcohol onto the lift detachable part.

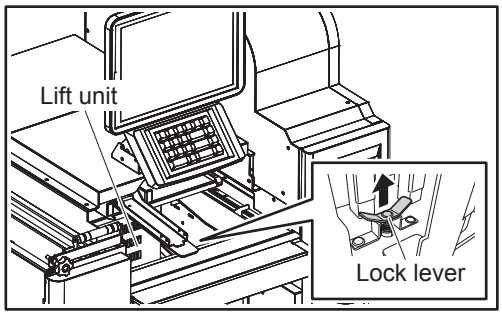

Detaching the lift unit.

1. Pull up the lock lever of the lift unit in the direction of the arrow to release it.
2. Slide the lift unit to the back and remove it.

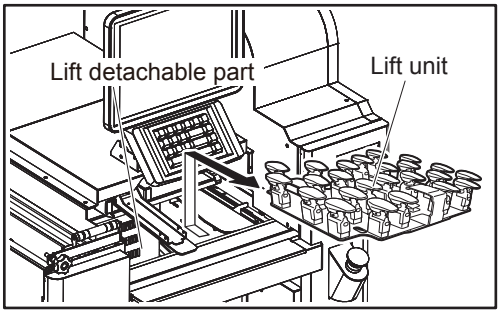

1.5.3 Assembly

This section describes the assembly procedure for each part.

1. Install the lift unit.

CAUTION

Rinse the lift unit with water and thoroughly dry it before installation.

CAUTION

When installing the lift unit, be careful not to bump it against the surrounding areas.

1. Install the lift unit so that it is horizontal with the wrapper and slide it toward you.
   After installing the lift unit, check that the mounting pin is attached to the lock on the lift unit by viewing the lift unit from above, and that there is no rattling when moving the lift unit back and forth.

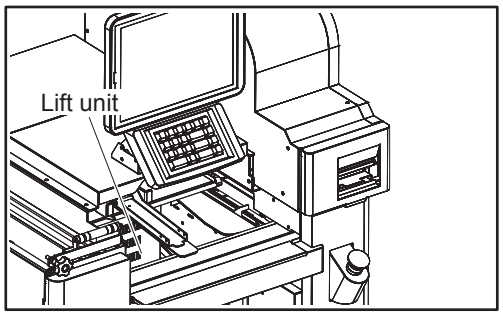

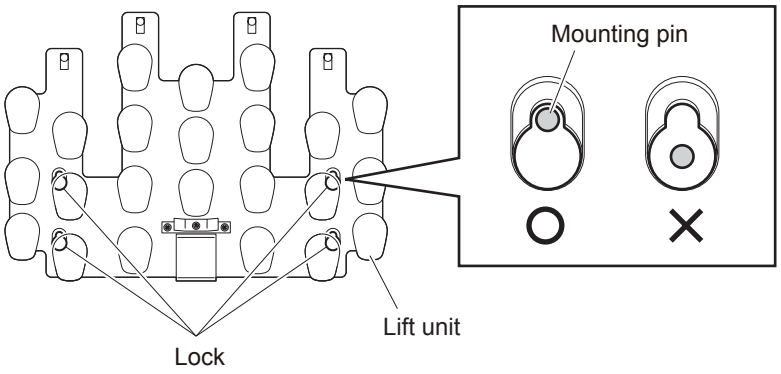

2. Spray alcohol after installation.

2. Install the garbage tray.

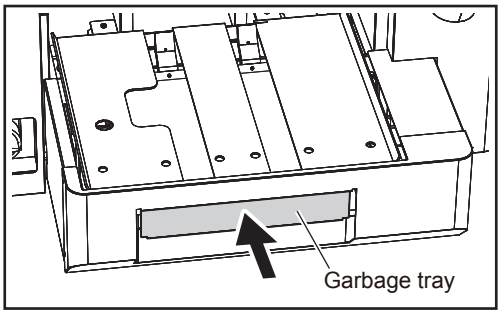

3. Mount the weighing platter.

CAUTION

When installing the weighing platter, be careful not to bump it against the surrounding areas.
Rinse the weighing platter with water and thoroughly dry it before installation.

Insert the weighing platter into the mounting area of the infeed unit.

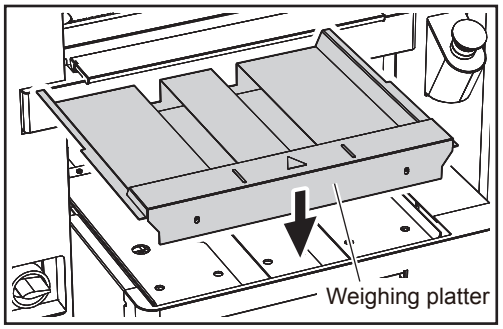

1.5.4 Cleaning the Cutter Unit (Linerless)

This section describes the procedure for cleaning the cutter unit.
To maintain clear printing and normal label issuance and cutting, be sure to turn off the main unit power after completing daily work before cleaning. In addition, be sure to clean any dirt or label adhesion along the label path other than in the areas described below.

CAUTION

The platen rollers (2 locations) are specially treated, so never use organic solvents such as alcohol or water on the rollers. If used incorrectly, the platen rollers may deteriorate, causing problems during label transfer. If used incorrectly, the platen rollers may deteriorate and cause problems during label transport.
If dirt adheres to the platen roller, wipe it dry with the attached yellow cloth.

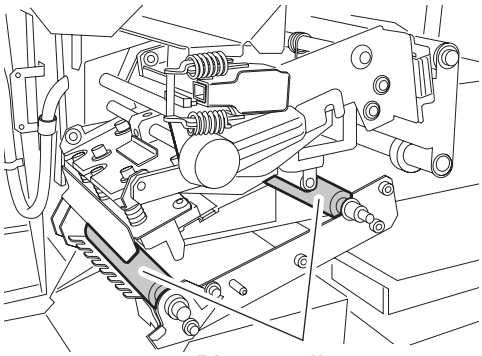

Platen rollers

1. Open the printer cover A.

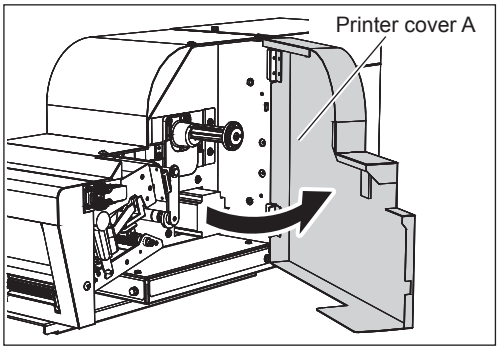

2. Open the latch and open printer cover B.

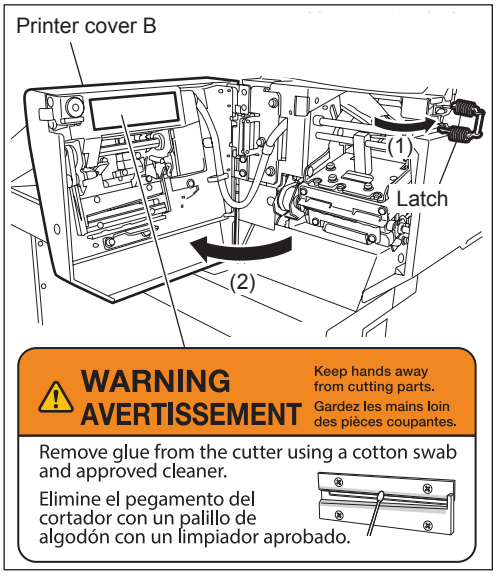

WARNING

When raising the upper blade to the cleaning position or when removing dirt, be careful not to let your fingers touch the blade.

3. Clean the cutter (upper blade).

3-1 Push in the knob of the upper blade with your thumb and raise the upper blade to the cleaning position.

3-2 Apply cleaner to the attached cotton swab and remove any dirt from the tip, front, and back of the blade with the cotton swab.

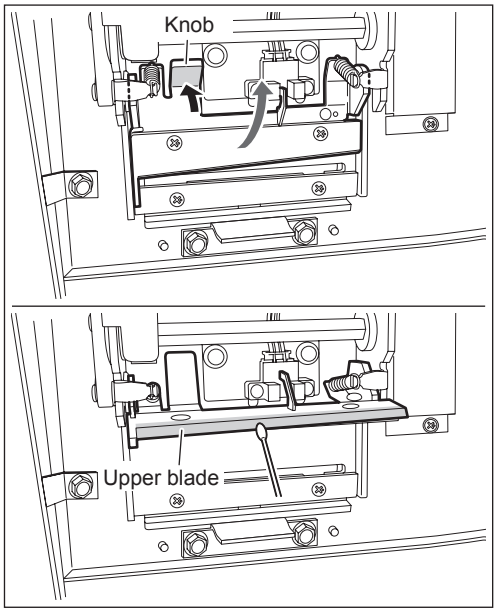

WARNING

When removing dirt from the lower blade or when returning the upper blade to its home position, be careful not to let your fingers touch the blade.

4. Clean the cutter (lower blade).

Apply cleaner to the attached cotton swab and remove any dirt from the tip, front, and back of the blade with the cotton swab.

After cleaning, return the upper blade to its home position.

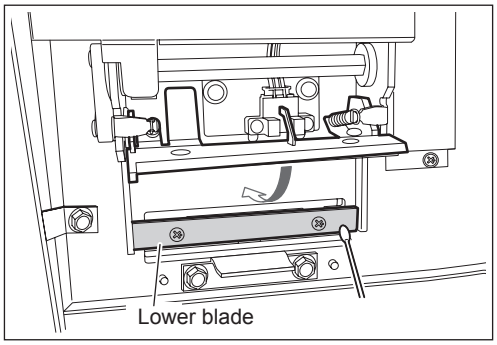

5. Push up the head release lever.

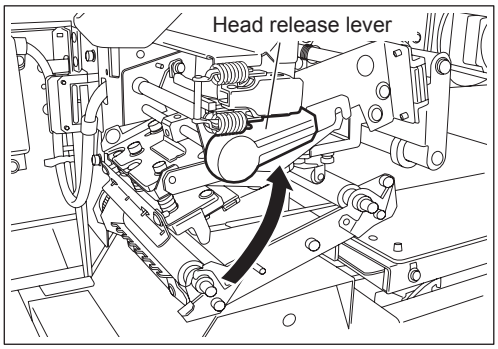

6. Clean the thermal head.

Apply cleaner to the attached white cloth and remove any dirt from the thermal head and the plate area where the label comes in contact with it.

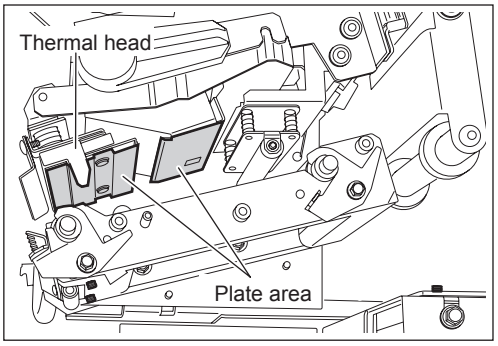

7. Clean the label rollers and label guides.

⚠ CAUTION

Be careful not to use too much force when wiping the guides.
If the guide position becomes misaligned, the guide must be readjusted.

Apply cleaner to the attached white cloth and remove any dirt from the label rollers and label guides.

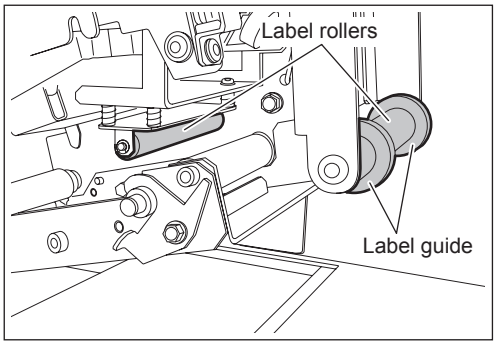

8. Push down the head release lever.

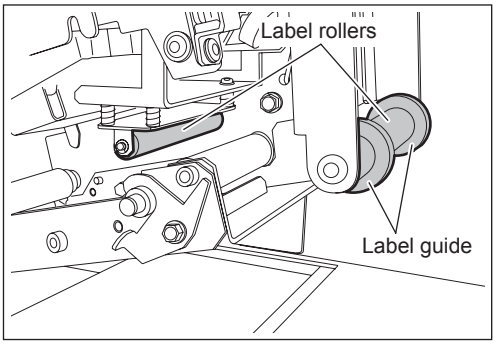

9. Close printer covers B and A and secure them with the latch.

⚠ CAUTION

Make sure the cutter (upper blade) has returned to its home position.
Closing the printer cover before it has returned to its home position may damage the cutter.

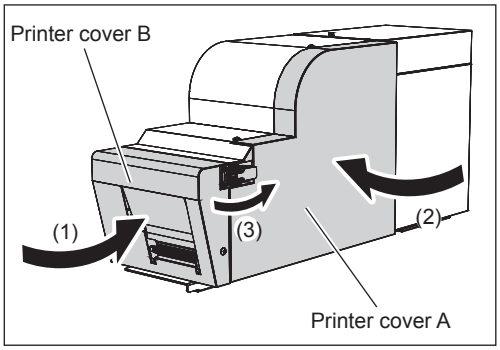

1.5.5 Operation Check

This section describes the operation check procedure after cleaning is completed.

1. Turn on the main power switch on the left-side of the machine.

The "Confirm the return to original position" message is displayed on the touch-panel.

It takes about a minute for this message to appear.

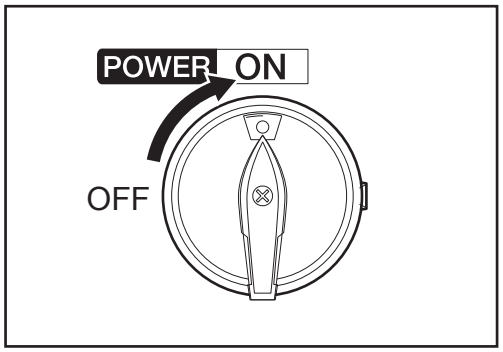

WARNING

The discharge heater will become hot. Do not allow your hand, clothing, etc. to come into contact with the machine. Failure to do so may result in burns.

2. Touch [RETURN] on the "GO BACK TO ORIGINAL POSITION" screen.

RETURN

The conveyor and lift return to their original positions and the initial screen is displayed.
The time confirmation screen is then displayed.
Touch [CONFIRM] to display the production screen.

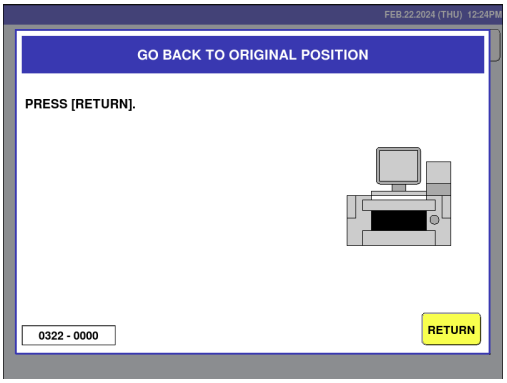

WARNING

Do not put your hand(s) or other objects inside the wrapper during return-to-original operation.

3. Press the [ZERO] stroke key.

Zero adjustment of the weighing unit is executed and "ZERO" is displayed in the zero-display field after adjustment.

4. Perform weighing check.

Although it depends on how often the machine is used, perform a startup inspection using the provided test weight once a day.

5. Press the [FEED] stroke key.

A label is issued.

6. Press the emergency stop switch.

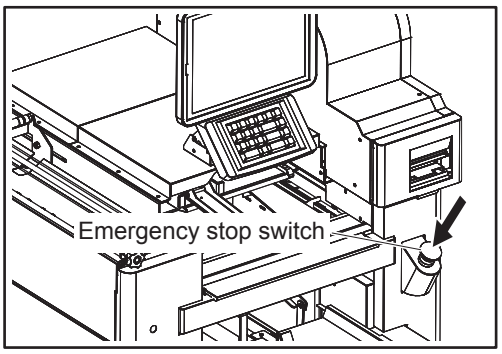

7. Clean up any debris that has fallen on the floor with a mop.

8. Release the emergency stop switch.

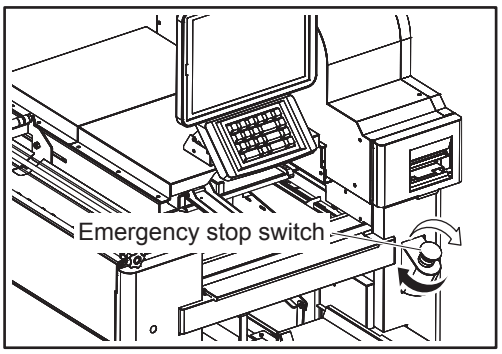

1.6 OPERATION START / END

This section describes the procedures for starting and ending the operation of the wrapper.

1.6.1 Starting Operation

WARNING

The discharge heater section becomes hot and may cause burns. Do not allow your hand(s) or clothing to touch the main unit.

WARNING

Do not put your hand(s) in the wrapper while it is returning to its original position.

1. Touch [RETURN] on the "GO BACK TO ORIGINAL POSITION" screen.

RETURN

The conveyor and lift return to their original positions and the initial screen is displayed. The time confirmation screen is displayed.

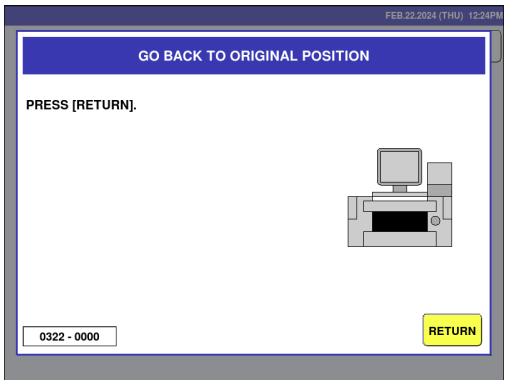

2. When performing wrapping work, lower the safety guard to the guard release position.

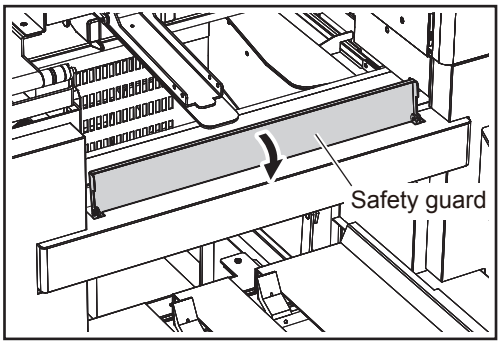

1.6.2 Ending Operation

WARNING

The discharge heater remains hot for some time after the main power is turned off. Do not allow your hands, clothing, etc. to come in contact with the heater. There is a risk of burns.

1. Make sure that there are no items or other objects on the infeed unit or wrapper, and then turn off the main power switch.

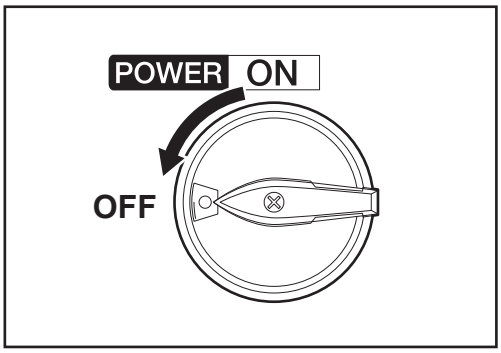

2. Lift the safety guard to guard position.

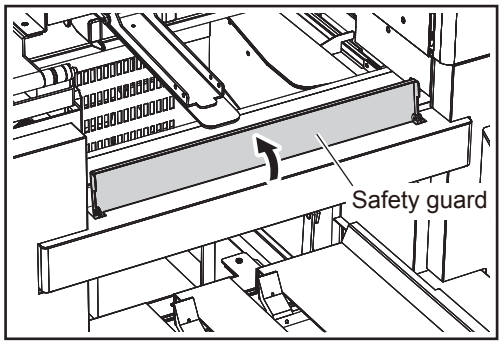

1.7 FILM LOADING / REPLACEMENT

This section describes how to set and replace the film. Make sure you fully understand the procedure before setting the film.

1.7.1 Film Loading

1. Press the emergency stop switch.

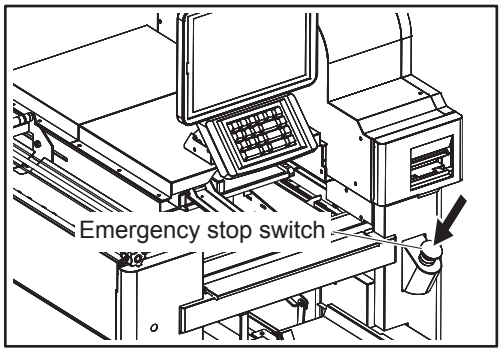

2. Open the film cover.

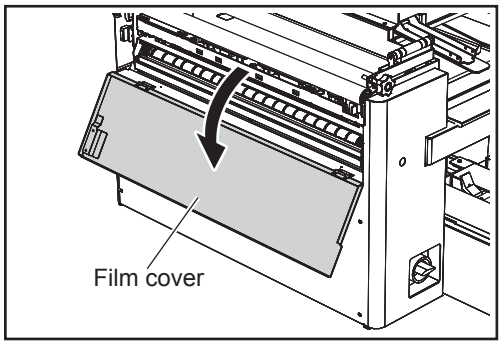

CAUTION

Do not wind the film in the wrong direction. Doing so may cause a malfunction.

3. Place the film roll on the roll holder.

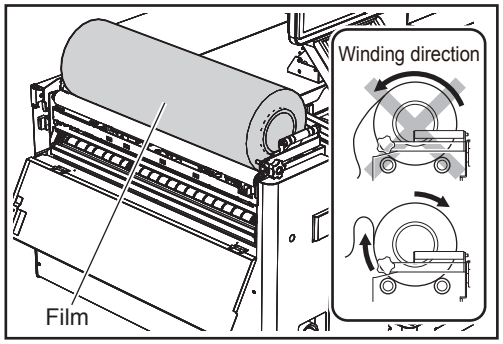

INFORMATION

If a tray with a short depth dimension falls over when discharged, change the film fixing position.
Shift the end face of the film roll to the position marked with "(2)" on the roll holder.

4. Adjust the film guide on the front side of the device.

Loosen the film guide fixing screws and slide the guide so that the end face of the roller is aligned with the end face of the film roll.

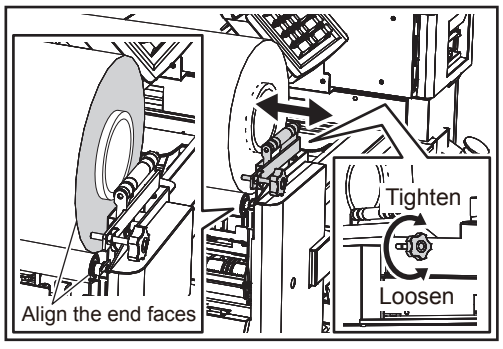

5. Adjust the film guides located at the back of the device.

Loosen the film guide fixing screws and slide the guide so that the end face of the roller is aligned with the end face of the film roll.

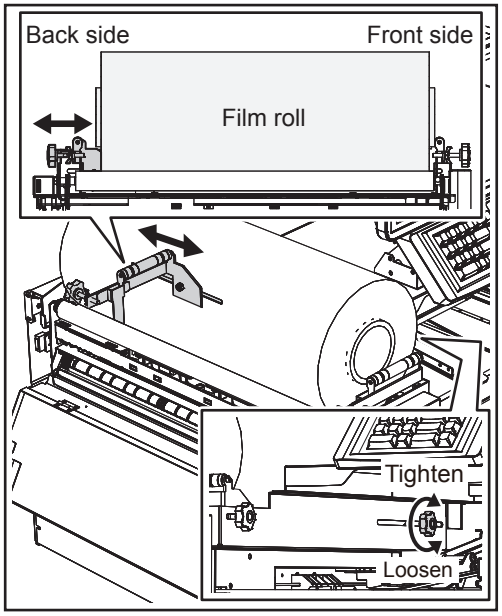

⚠ CAUTION

Pull the film through to the position where it will be pressed when the film presser is lowered.

6. Lift the film presser and pass the film through.

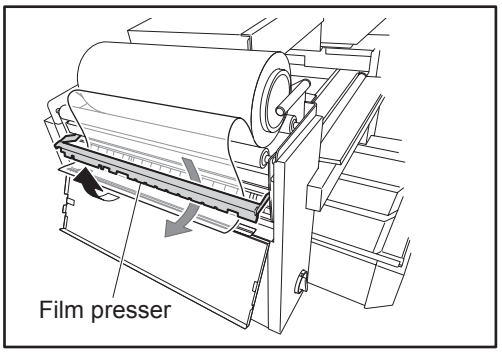

7. Spread the film to the full film width to avoid wrinkles, then lower the film presser and close the film cover.

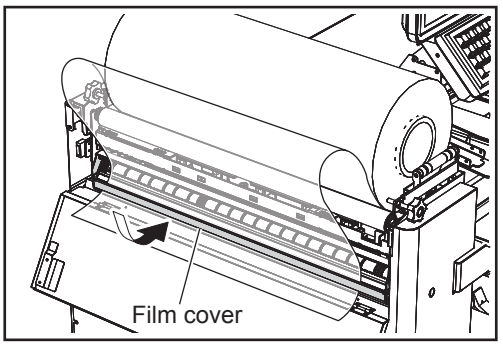

8. Release the emergency stop switch.

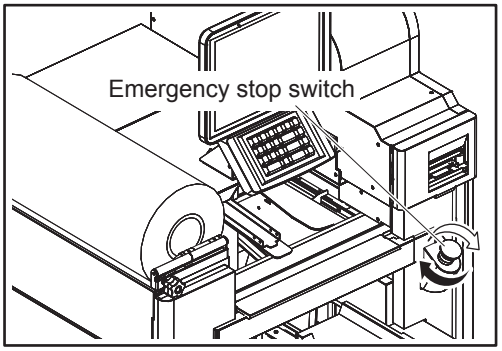

REFERENCE

If the film is not feeding properly, check that the film is not wound around the film loading section.
If the film is rolled around the film roller, remove the film by referring to "Removing Film Wrapped Around Roller" on page page 1-24.

9. Touch [FILM FEED] on the initial screen.

FILM FEED

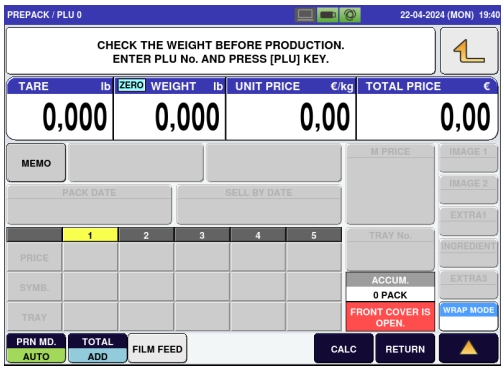

10. Press the emergency stop switch on the front panel.

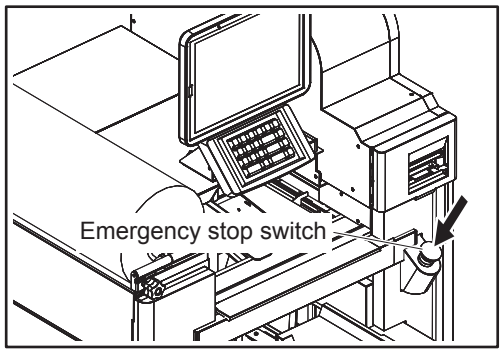

11. Remove the film on the wrapper.

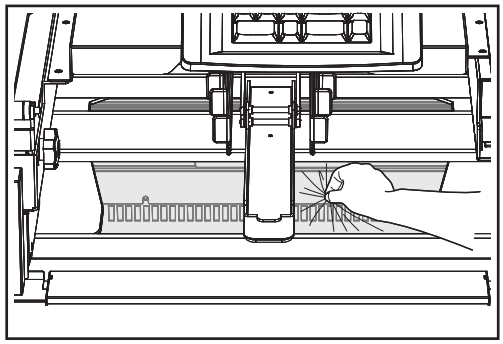

12. Release the emergency stop switch.

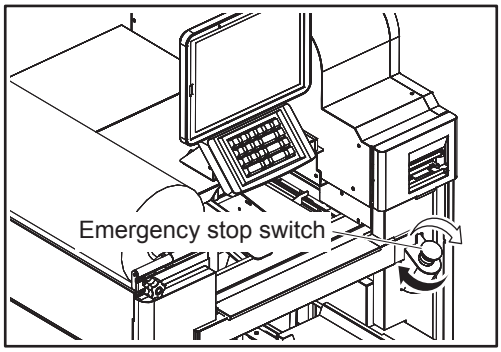

1.7.2 Film Replacement (Film Width Change)

1. **Touch [REMOVE FILM] from the pop-up function [△] on the screen.**

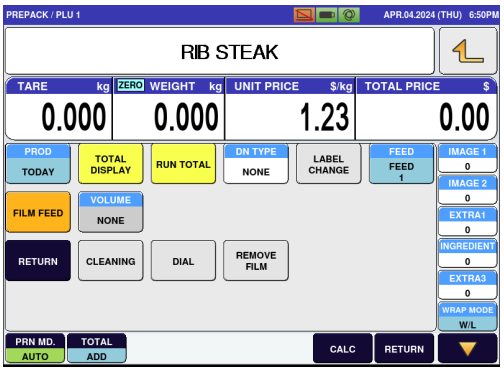

2. **Press the emergency stop switch on the front panel.**

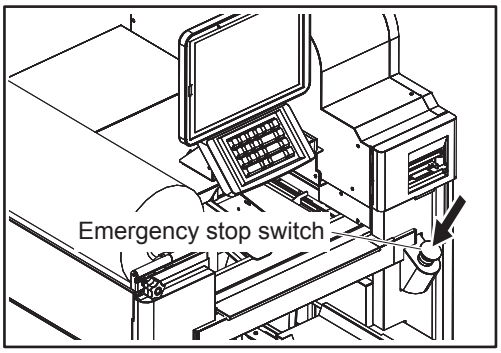

3. **If there is a film on the wrapper, remove the film as shown in the figure on the right.**

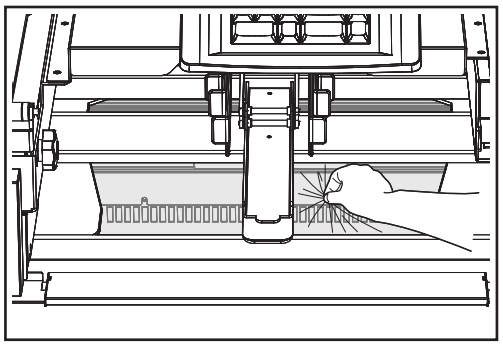

4. **Remove the film roll that has been used.**

5. **Open the film cover.**

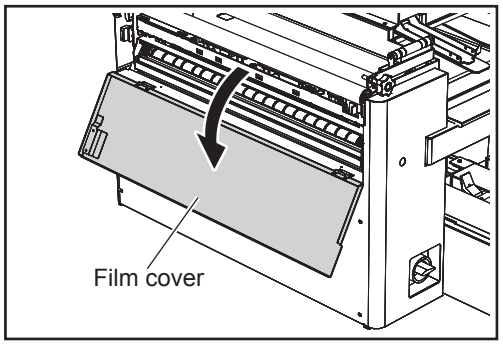

CAUTION

Do not wind the film in the wrong direction. Doing so may cause a malfunction.

6. Place the film roll on the roll holder.

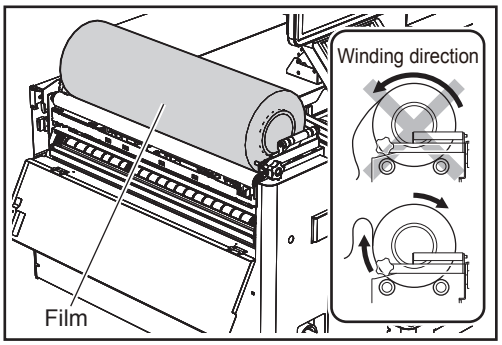

INFORMATION

If a tray with a short depth dimension falls over when discharged, change the film fixing position.
Shift the end face of the film roll to the position marked with "(2)" on the roll holder.

7. Adjust the film guide on the front side of the device.

Loosen the film guide fixing screws and slide the guide so that the end face of the roller is aligned with the end face of the film roll.

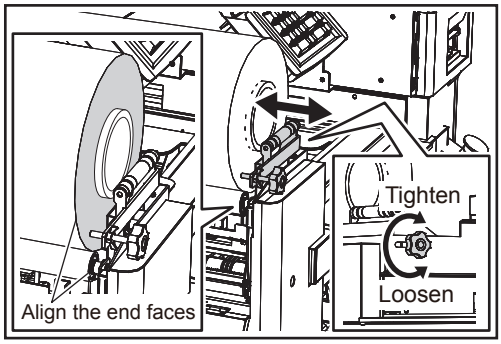

8. Adjust the film guides located at the back of the device.

Loosen the film guide fixing screws and slide the guide so that the end face of the roller is aligned with the end face of the film roll.

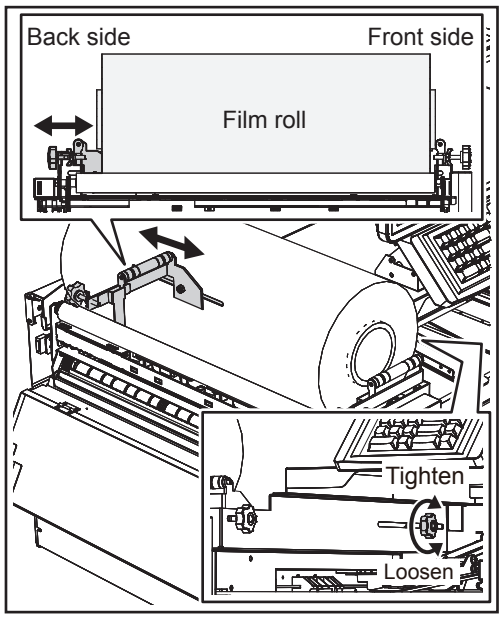

CAUTION

Spread the film to the full film width to avoid wrinkles, then lower the film presser and close the film cover.

9. Lift the film presser and pass the film through.

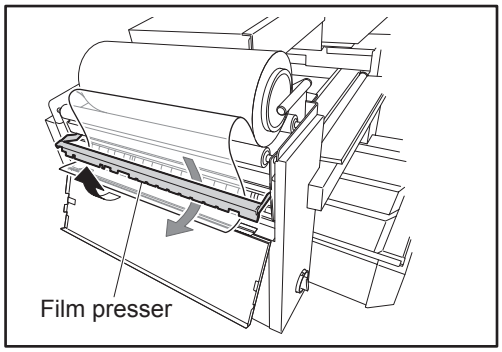

10. Spread the film to the full film width to avoid wrinkles, then lower the film presser and close the film cover.

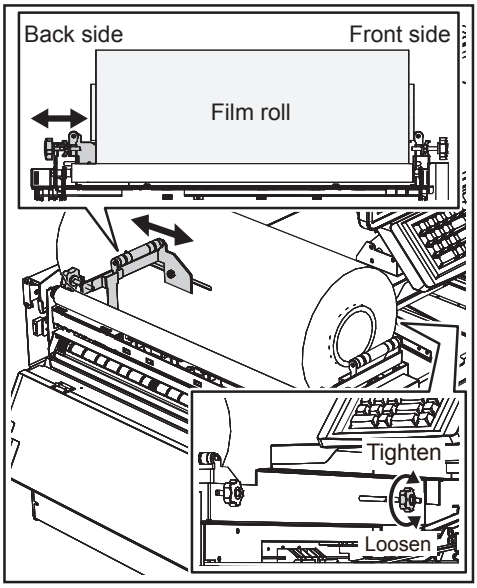

11. Release the emergency stop switch.

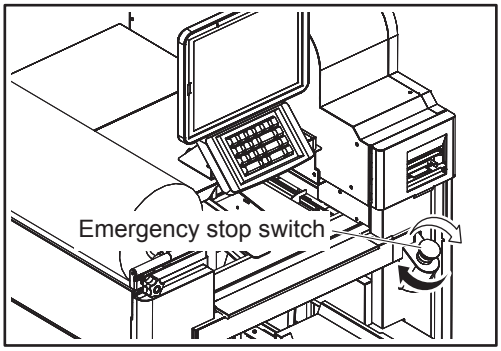

REFERENCE

If the film is not feeding properly, check that the film is not wound around the film loading section.
If the film is rolled around the film roller, remove the film by referring to "Removing Film Wrapped Around Roller" on page page 1-24.

12. Touch [FILM FEED] on the initial screen.

FILM FEED

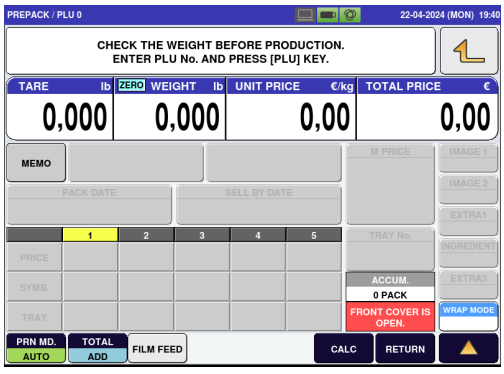

13. **Press the emergency stop switch on the front panel.**

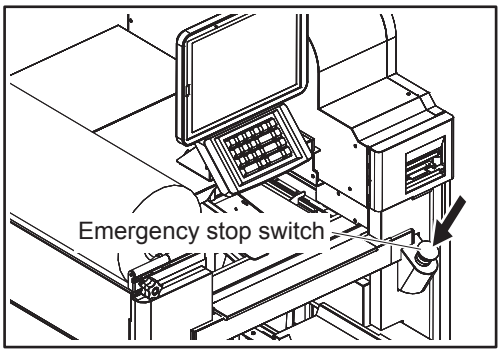

14. **Remove the film on the wrapper.**

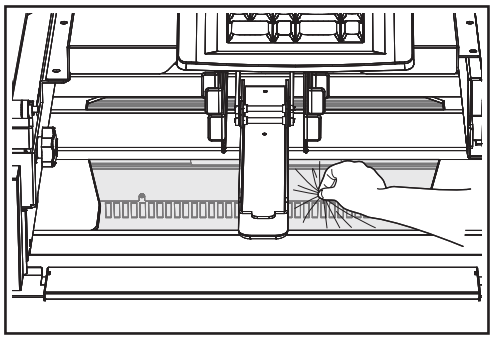

15. **Release the emergency stop switch.**

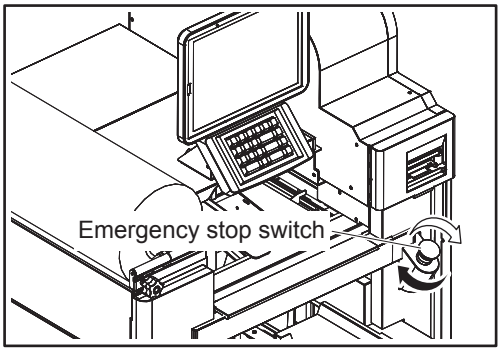

1.7.3 Removing Film Wrapped Around Roller

1. Press the emergency stop switch on the front panel.

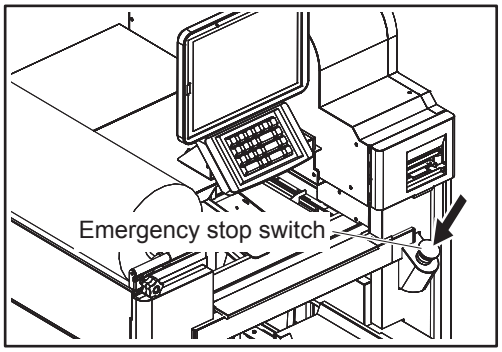

2. Remove the rubber cap on the left side of the front panel of the machine and open the film cover.

When the rubber cap is removed, you can access the bolt for rotating the feed roller.

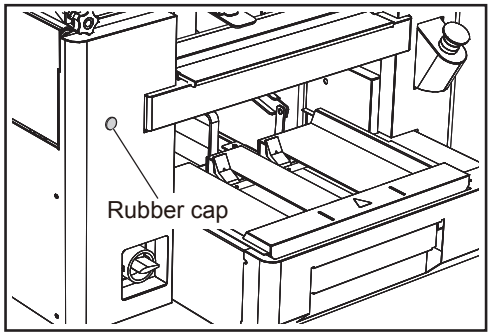

3. Push in the lever and unlock the film presser. Then lift the film presser.

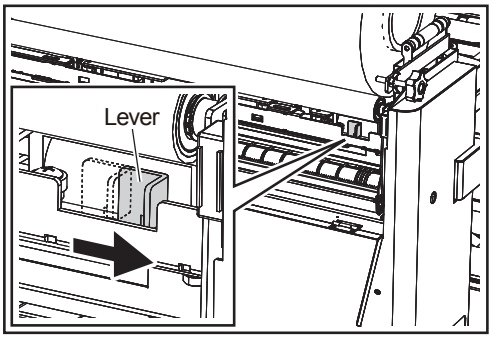

CAUTION

Be careful not to touch the film cutter when removing the film.

4. Using the provided film removal handle, remove the film rolled around the roller by turning the feed roller rotation bolt clockwise while grasping the rolled film.

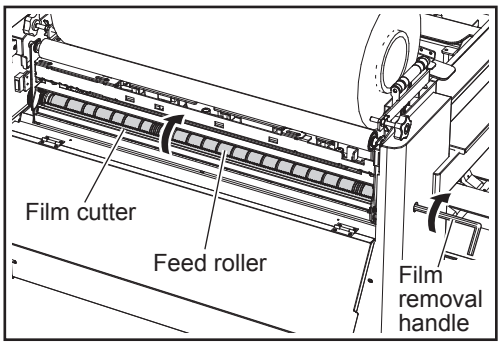

CAUTION

Be sure to remove the film using the provided handle and your hands.
Never use a knife or other cutting instrument for removal as it may cause damage or malfunction.

REFERENCE

If the film needs to be reloaded, see "Film Loading" on page page 1-17.

⚠ CAUTION

When unlocking the film presser by pressing the lever, be sure to do so while supporting the film presser with your hand. Failure to do so may cause the film presser to move down suddenly and pinch your hand, possibly resulting in injury.

5. **Push in the lever and unlock the film presser. Then lower the film presser.**

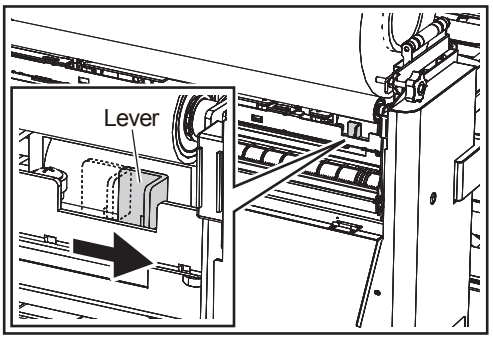

6. **Release the emergency stop switch.**

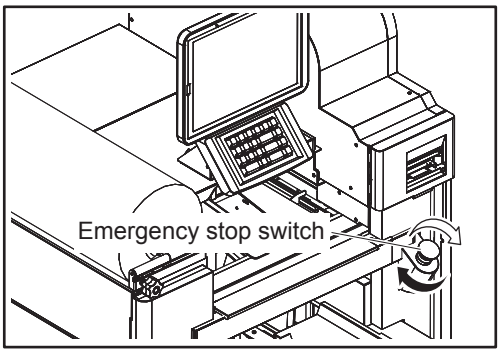

1.8 LABEL SETTING (WITH LINER)

This section describes how to set labels. Make sure that you fully understand the procedure before setting.

1. Open the printer cover B and printer cover A in this order.

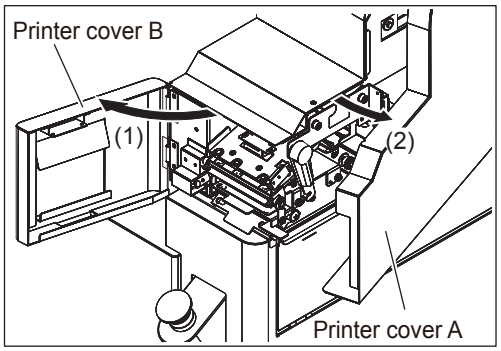

2. Push down the lever labeled "LOWER" in the right picture to open the printer unit.

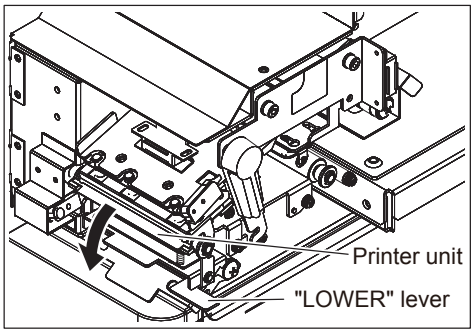

3. Push up the head release lever.

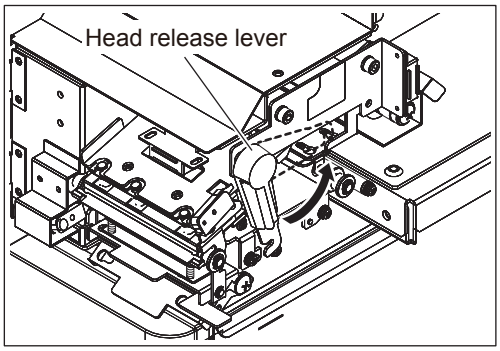

4. Set the label roll.

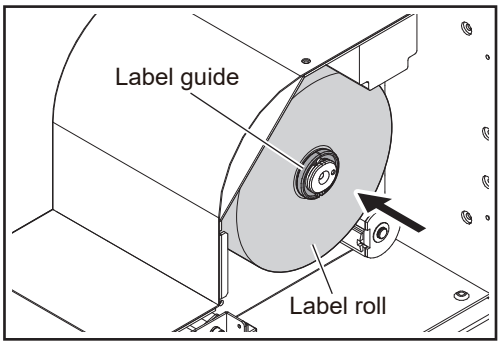

NOTE

Be sure to pass the labels through the sensor (3).

5. Pass the label through.

Pass the labels through from (1) to (6) in order as shown in the figure on the right.

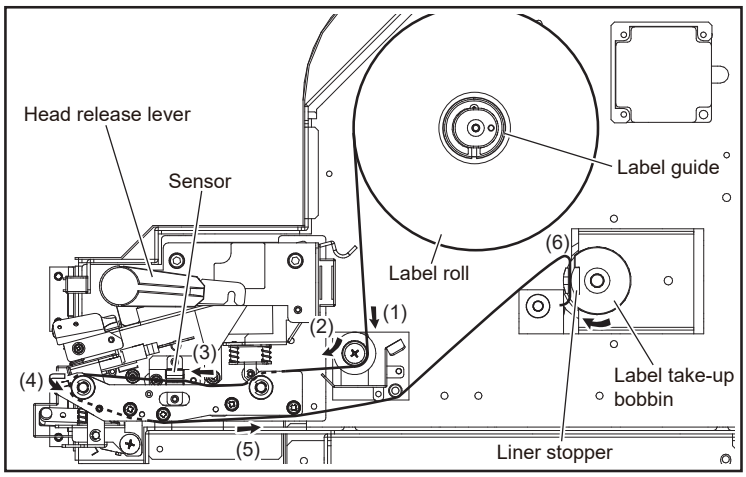

6. Secure the tip of the label liner with the liner stopper and gently turn the label take-up bobbin clockwise.

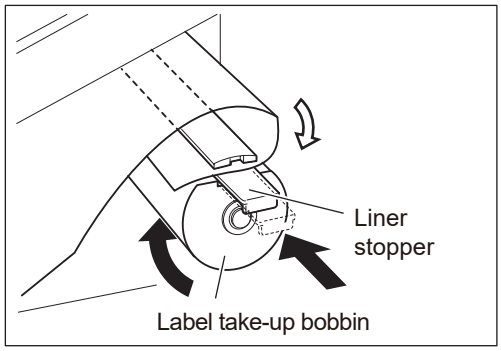

7. Align the left edge of the label with the edge of the lower guide plate.

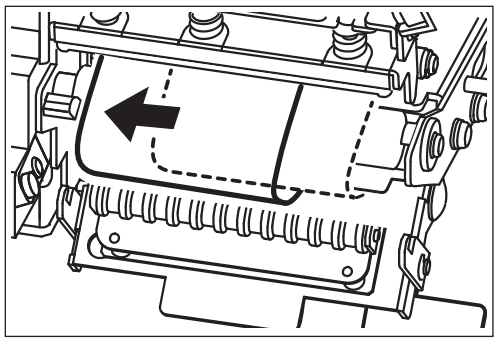

8. Return the head release lever to the original position.

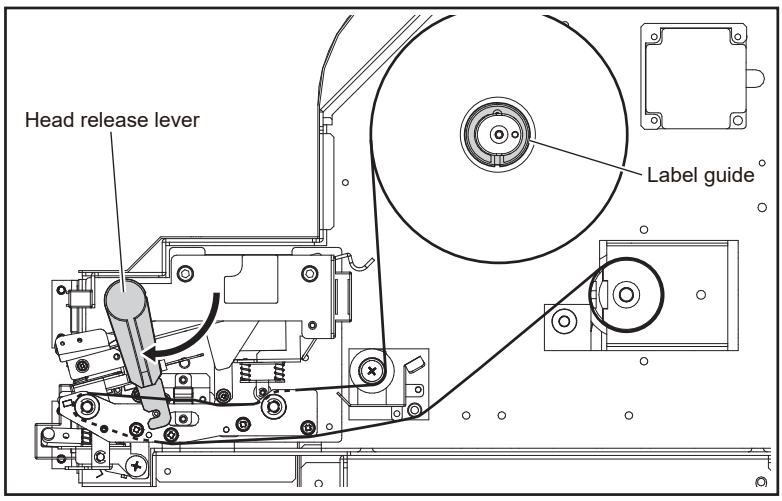

9. Push up the "LOWER" lever to close the printer unit.

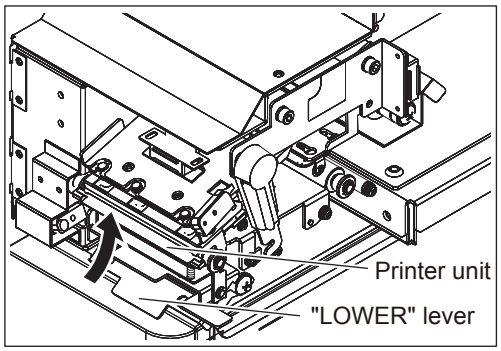

10. Close the printer cover A and printer cover B in this order.

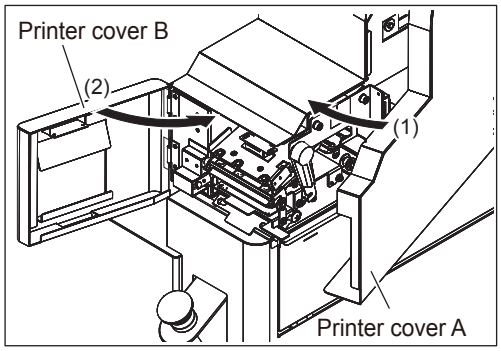

11. Press the [FEED] stroke key continuously until the label comes up.

The label is issued, and the peeling position is determined.

Press the [FEED] stroke key continuously until the label is completely peeled off.

Note:
Check that the liner is rolled up smoothly. If the label is wound diagonally, recheck the way the label is threaded and the position where the label is stopped by the liner stopper.

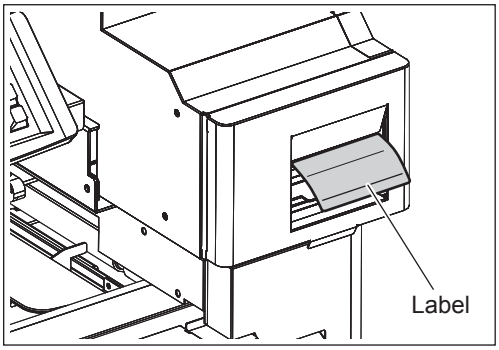

1.9 LABEL SETTING (LINERLESS)

This section describes how to set labels. Make sure that you fully understand the procedure before setting.

1. **Open the printer cover A.**

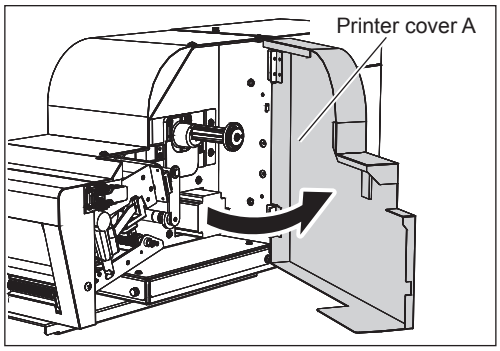

2. **Open the latch and open printer cover B.**

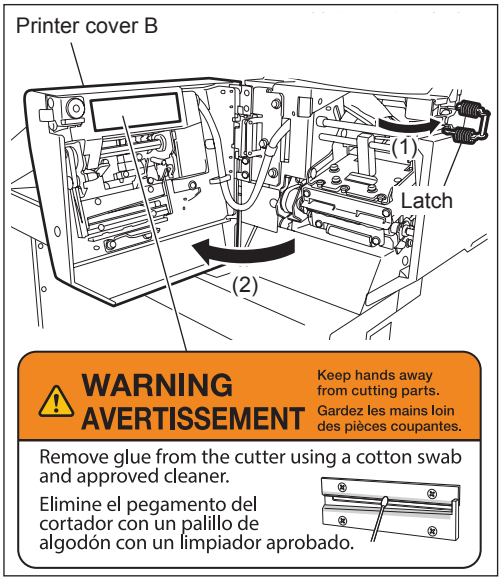

3. **Push up the head release lever.**

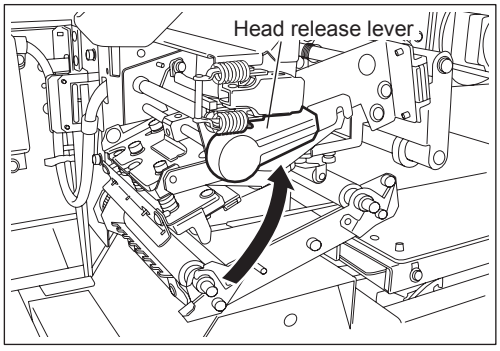

4. **Set the label roll.**

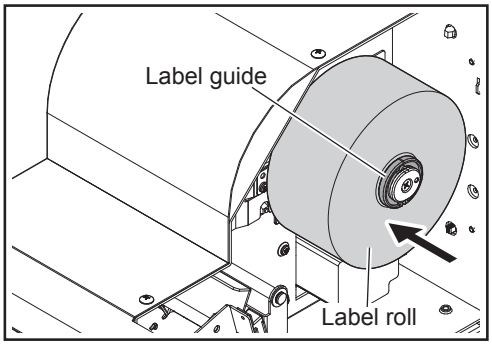

5. Pass the label through.

Pass the labels through from (1) to (3) in order as shown in the figure.

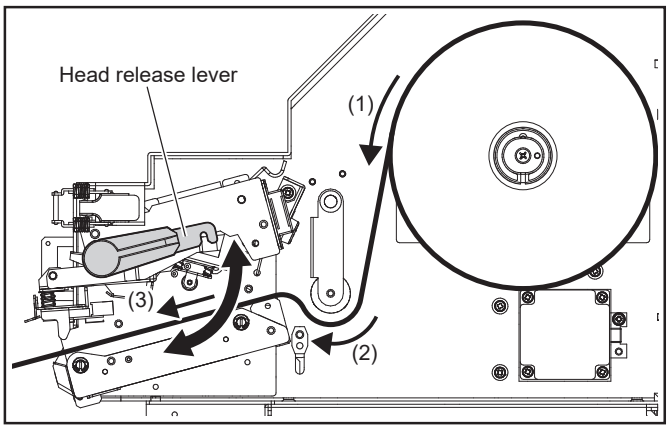

6. Align the left edge of the label with the edge of the lower guide plate.

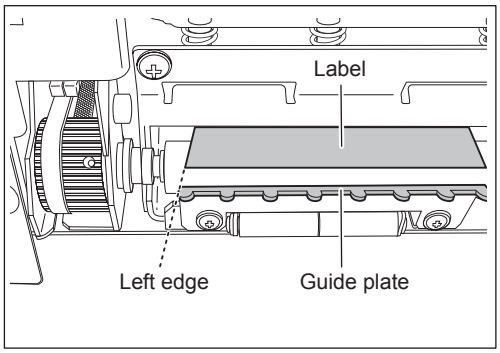

7. Push down the head release lever.

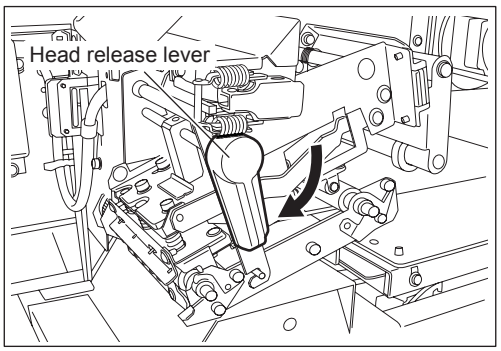

8. Cut off the excess label.

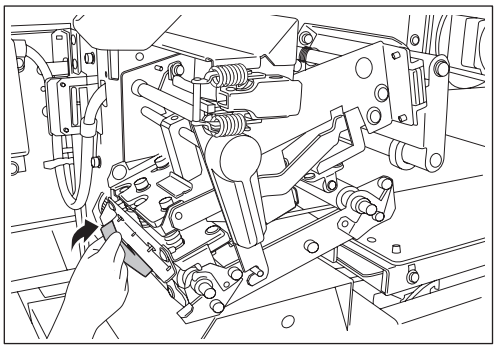

9. Close printer covers B and A and secure them with the latch.

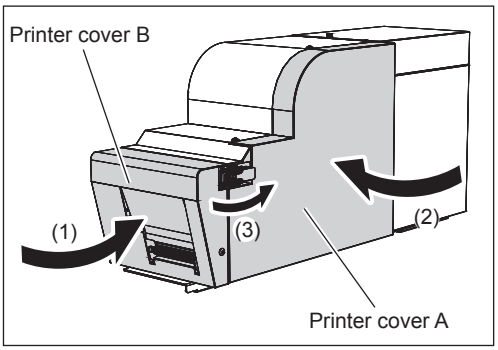

10. Press the [FEED] stroke key.

A label is issued and automatically cut out.

REFERENCE

If the printing on the label is misaligned or the label is printed in a meandering manner, feed the label several times.

1.10 DEFINITION OF TARE WEIGHT

What is Tare Weight?

The gross weight of a pack item is composed of the net weight of the item, and the weight of decorative ornaments effective for promoting the deliciousness of food, the weight of seasoning such as soy sauces that are attached to the item, and the weight of the film and tray.
All weights other than the net weight of the item is collectively called tare weight.

In order to calculate the net weight of the item, this machine handles the tare weight as follows.
The gross tare weight will be displayed when the item is called on the normal screen.

Gross tare weight = [Tray weight + Film weight] + [Insert weight]

- Green horseradish paste
- Soy sauce
- Sauce
- Decorative ornaments

<Tray weight + Film weight>

As the tare weight is constant for each tray, the tray data is registered.
See “Tray Registration” on page 4-16.

<Insert weight>

As the content of the tare weight changes depending on the item, the item data is registered. See “PLU Registration” on page 4-3.

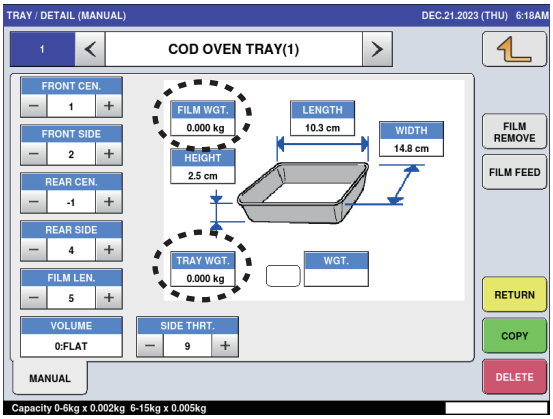

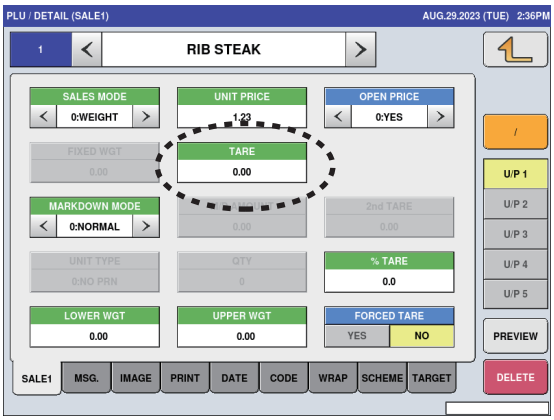

- Even when the tray size has been changed for the same commodity item, the net weight can be automatically calculated by registering the tare data in two locations.
- The tare weight displayed is different when "WRAP/PRICE" is selected and when "PRICE" is selected.

WRAP MODE W/L → Tare weight = Tray weight + Insert weight

WRAP MODE LABEL → Tare weight = Gross tare weight = (Tray weight + Film weight) + Insert weight

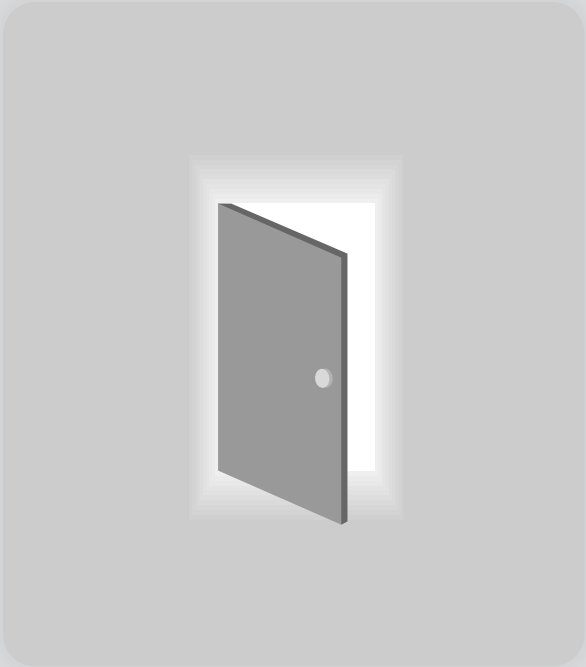

CHAPTER 2

BASIC OPERATIONS

2.1 PRODUCTION MODE SCREEN

2.1.1 Display Fields on Initial Screen

■Screen for Weighing Items

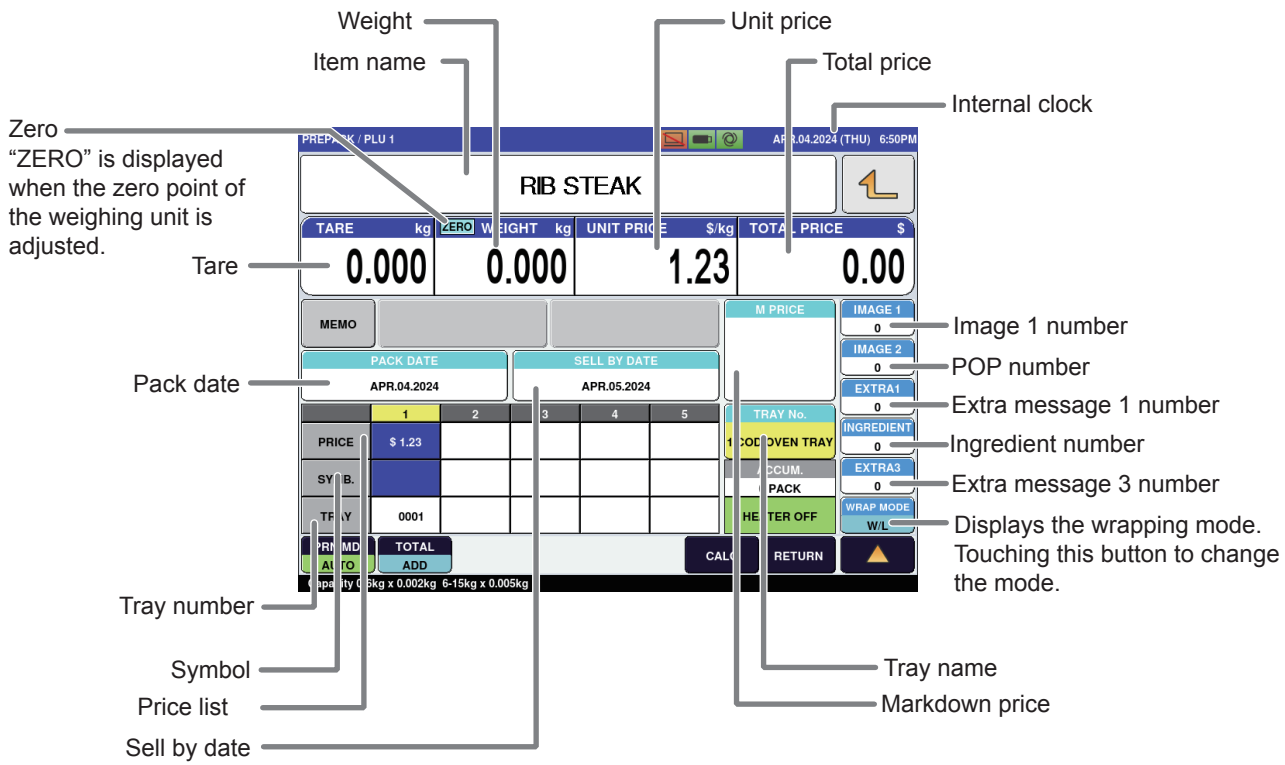

■Screen for fixed price items

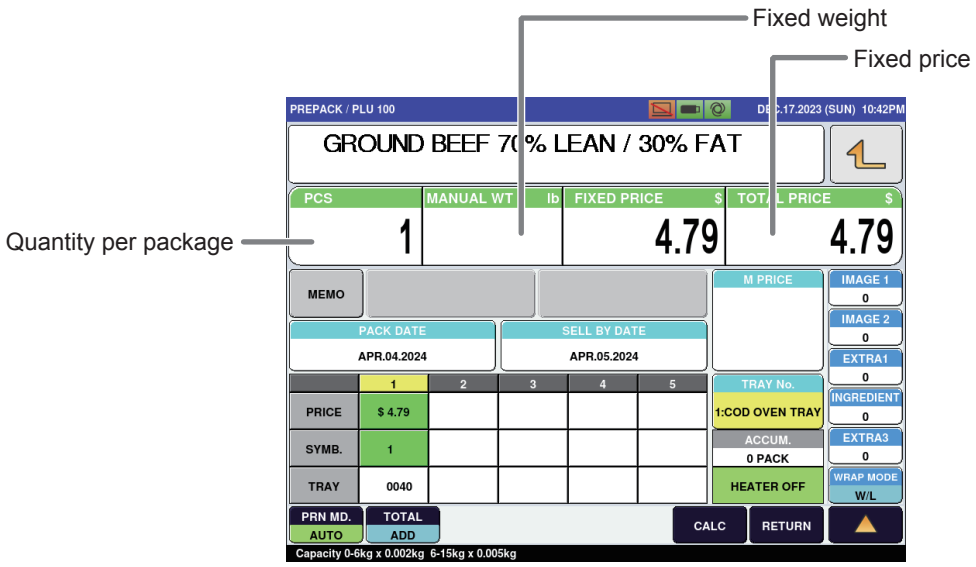

2.1.2 Touch Keys on Initial Screen

■ Screen for Weighing Items

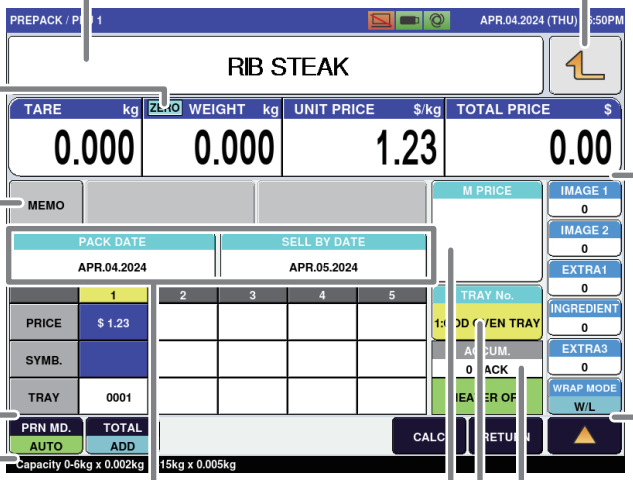

Displays the label printing content screen when touched.
(See page 3-14)

Displays the main menu.

Displays the zero status of the weighing unit.

Displays the memo preset PLU screen.
(See page 3-4)

Numeric function keys
For information on useful features of function keys, see page 3-15.

Main function keys
for information on useful features of function keys, see page 3-15.

Displays the production subtotal.

Touch after entering a numerical value to change the data. Touching without entering a numerical value will display the pack/sell by date & time setting screen.
(See page 3-12)

Touch this button after entering a numerical value to change the data. Touching this button without entering a numerical value will display the tray list screen.
(See page 3-9)

Touch this button after entering a numerical value to change the data. Touching without entering a numerical value will display the markdown price input screen. (page 3-11)

■ Screen for Fixed Price Items

Touch this button after entering a numerical value to change the data.
Touching without entering a numerical value will display the fixed price symbol list screen.
(See page 3-10)

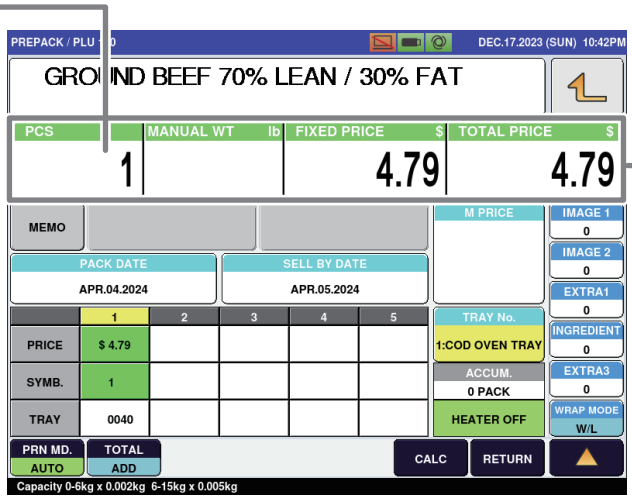

Touch this button after entering a numerical value to change the data.

2.2 WEIGHING, WRAPPING, LABELING

The WM-MICRO can perform weighing, wrapping, and labeling tasks, as well as perform these independent tasks for specific commands.

2.2.1 Weighing, Wrapping, Labeling

Example: Perform weighing, wrapping and the manual labeling for RIB STEAK registered as commodity item call number 1.

⚠ CAUTION

Touch the touch-panel lightly with your finger. Pressing the panel with a fingernail, mechanical pencil, or other pointed object may damage the touch-panel.

1. Enter the commodity item call number on the initial screen.

[1] [PLU]

Commodity item data such as item name "RIB STEAK" and unit price is displayed on the screen. Check price conditions such as price and place of origin.

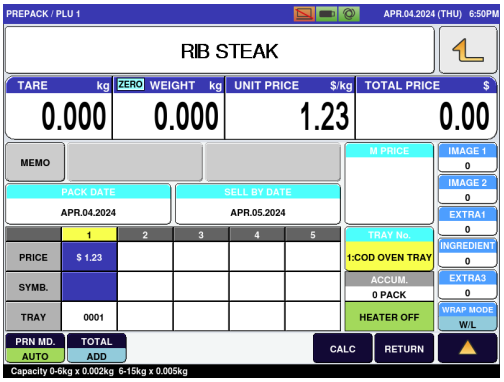

2. Change the wrapping mode display to [W/L].

[WRAP MODE / W/L]

Each time the function key is touched, the mode changes in the order of [W/L], [LABEL], [WRAP] and returns to [W/L].

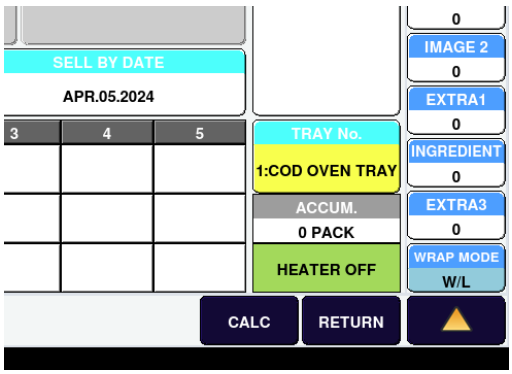

CAUTION

If the tray to be used is not listed in the table, enter the tray call number into the table.

0 ••• 9

Touch the blank field.

3. Confirm that the tray call number to be used for labeling is registered in the price list.

This operation is only necessary before the tray to be used is determined. For the following operations, there is no need to be aware of the tray call number.

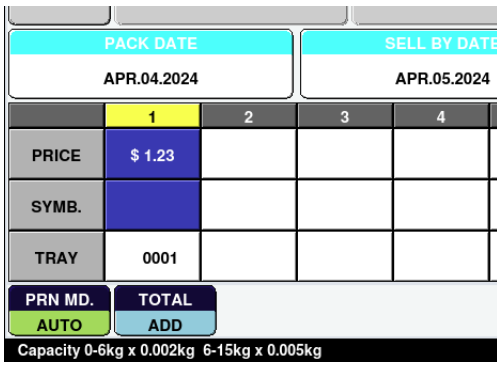

INFORMATION

Make sure that the tray is placed in the center of the weighing platter. If the tray is not centered on the weighing platter, it may not be wrapped correctly.

4. Place the commodity item packed in the tray in front of the center of the weighing platter.

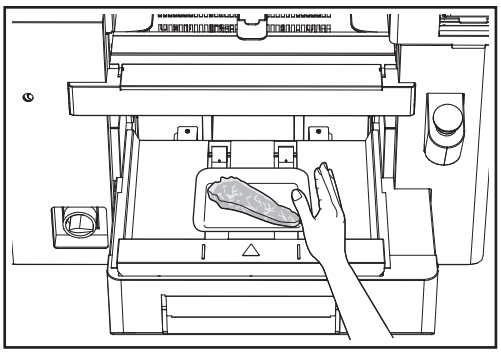

WARNING

Once the commodity item is placed on the weighing platter, do not touch it with your hand(s).
With the commodity item in place, the infeed bar of the infeed unit will automatically start moving, which may cause your hand(s) to get caught.

5. Pass commodity items through the machine in succession.

Weighed and packaged items are discharged from the machine.

6. Attach the issued label to the commodity item.

2.2.2 Wrapping Only

Example: Perform wrapping only for "RIB STEAK" registered as commodity item call number 1.

CAUTION

Touch the touch-panel lightly with your finger. Pressing the panel with a fingernail, mechanical pencil, or other pointed object may damage the touch-panel.

1. Enter the commodity item call number on the initial screen.

[1] [PLU]

Commodity item data such as item name "RIB STEAK" and unit price is displayed on the screen.

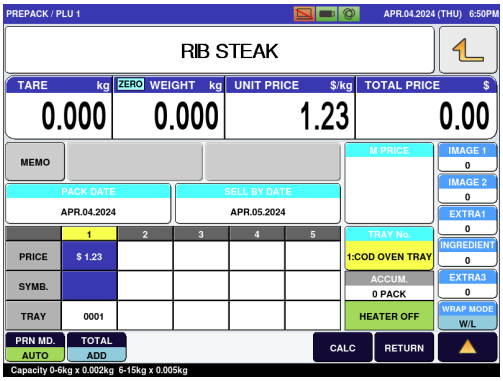

2. Change the wrapping mode display to [WRAP].

[PRN MODE] [WRAP]

Each time the function key is touched, the mode changes in the order of [W/L], [LABEL], [WRAP] and returns to [W/L].

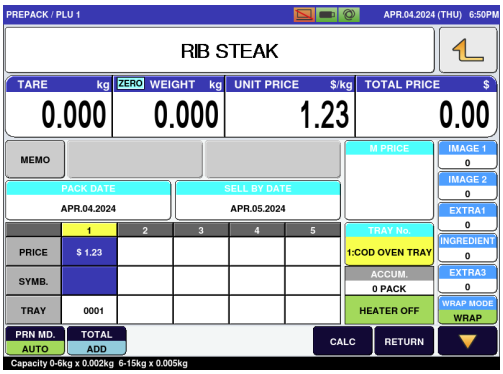

INFORMATION

Make sure that the tray is placed in the center of the weighing platter.
If the tray is not centered on the weighing platter, it may not be wrapped correctly.

3. Place the commodity item packed in the tray in front of the center of the weighing platter.

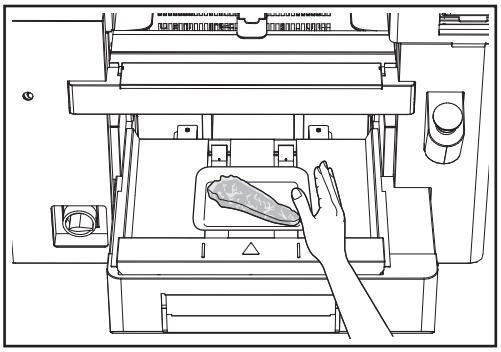

WARNING

Once the commodity item is placed on the weighing platter, do not touch it with your hand(s).
With the commodity item in place, the infeed bar of the infeed unit will automatically start moving, which may cause your hand(s) to get caught.

4. Pass commodity items through the machine in succession.

Weighed and packaged items are discharged from the machine.

2.2.3 Labeling Only (Manual)

Example: Perform manual labeling only for "RIB STEAK" registered as commodity item call number 1.

CAUTION

Touch the touch-panel lightly with your finger. Pressing the panel with a fingernail, mechanical pencil, or other pointed object may damage the touch-panel.

1. Enter the commodity item call number on the initial screen.

[1] [PLU]

Commodity item data such as item name "RIB STEAK" and unit price is displayed on the screen.

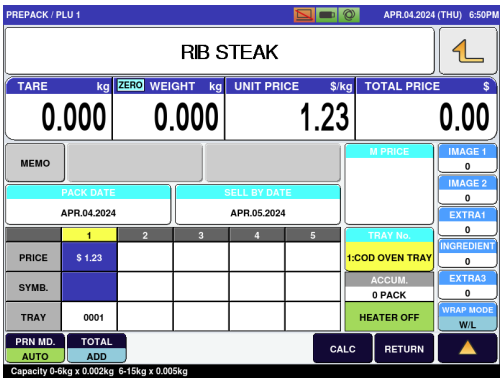

2. Change the wrapping mode display to [LABEL].

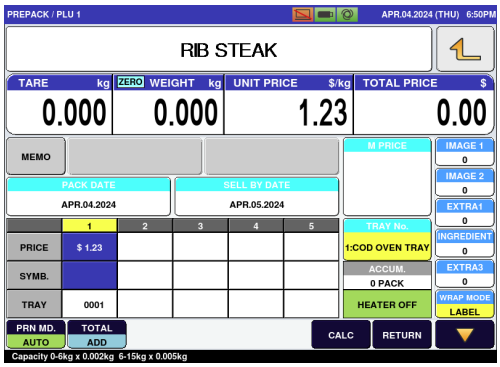

CAUTION

If the tray to be used is not listed in the table, enter the tray call number into the table.

[0] ••• [9]

Touch the blank field.

3. Specify the tray to be used for tare weight subtraction.

[2]

Check price conditions such as price and place of origin.

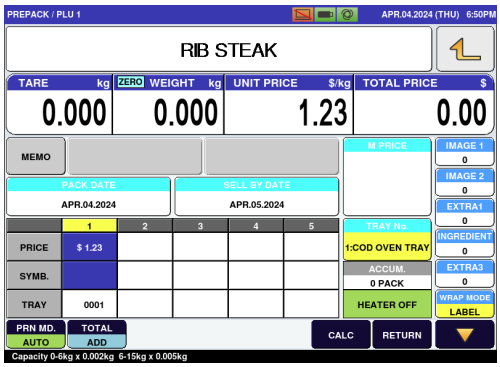

4. Place a pre-wrapped commodity item on to the weighing platter.

The commodity item is weighed, and the label is issued.

Manually attach the issued label to the commodity item picked up from the weighing platter.

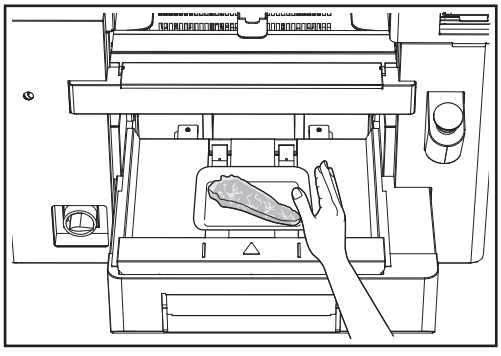

CHAPTER 3

USEFUL FUNCTIONS

3.1 CALLING ITEM DATA FROM DISPLAYED LIST

If you do not clearly remember the item number but you remember that the item number is somewhere around item number “15” for example, you can select it from the displayed item name list showing item names before and after the selected item number.

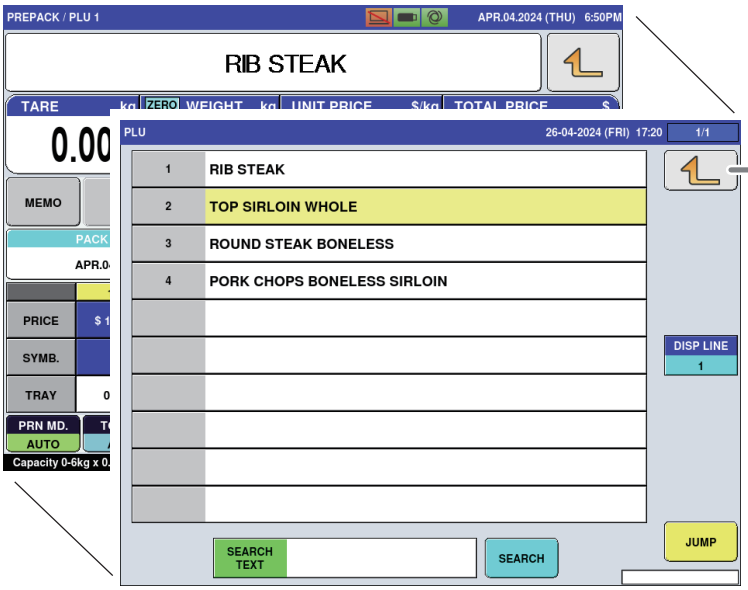

Closes the PLU list screen without selecting an item.

Example: Call up the item number of "ROUND STEAK BONELESS" that you do not remember clearly from the product list.

INFORMATION

If the item that you want to call up is not displayed on the screen, touch △ or ▽ to switch pages.

1. Enter the item number that is approximately you guess and touch [PLU No.].

2 PLU No.

A list of nearby item names corresponding to the entered item number will be displayed.

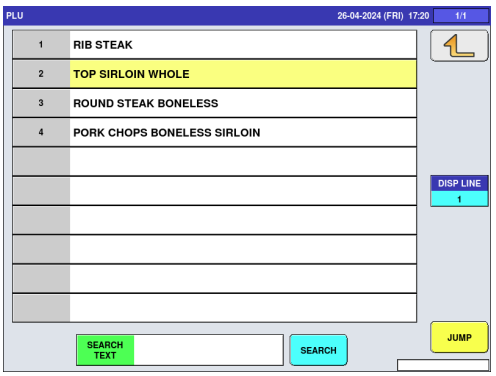

INFORMATION

The desired item can also be called up by touching [PLU] after entering a numerical value.

2. Touch the "ROUND STEAK BONELESS" display field.

3	ROUND STEAK BONELESS

The system automatically returns to the production screen and displays the selected item data.

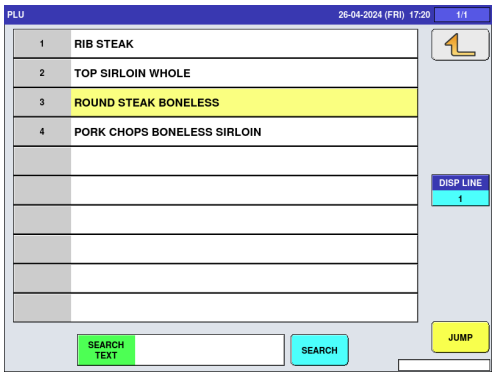

3.1.1 Searching and Calling Items

The desired item name can also be called up from among registered items by searching for the name using the character string contained in the item name as a keyword.

1. Touch [PLU No.].

PLU No.
0

The production (item list) screen is displayed.

2. Touch the search text field.

SEARCH TEXT

The character input screen is displayed.

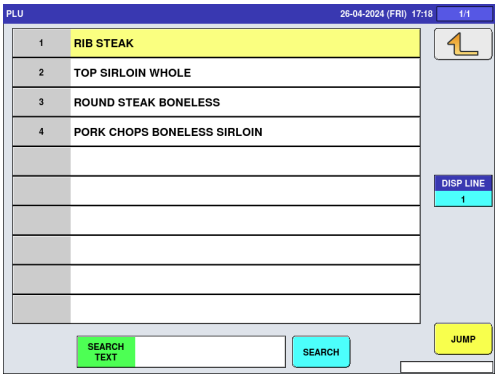

3. Enter the character string you want to search and touch the Return button.

The system returns to the production (item list) screen.

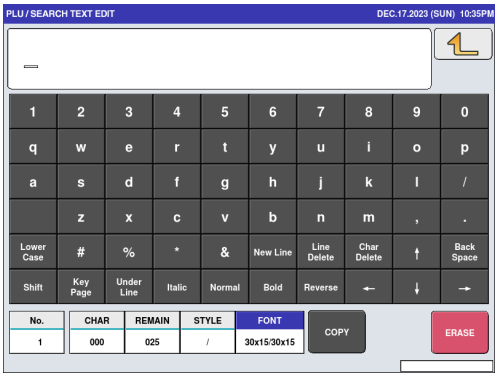

4. Touch [SEARCH] on the production (item list) screen.

SEARCH

A list of items containing the entered character string is displayed.

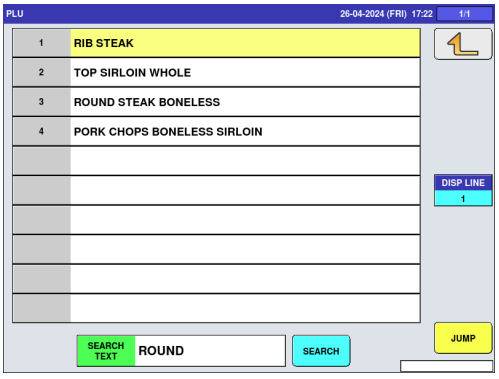

INFORMATION

For information on how to enter characters, see "Character Entry Method" on page 4-55.

3.2 CALLING ITEM DATA WITH MEMO PRESET KEYS

By registering frequently called items to the memo preset keys in advance, smooth operation can be achieved.

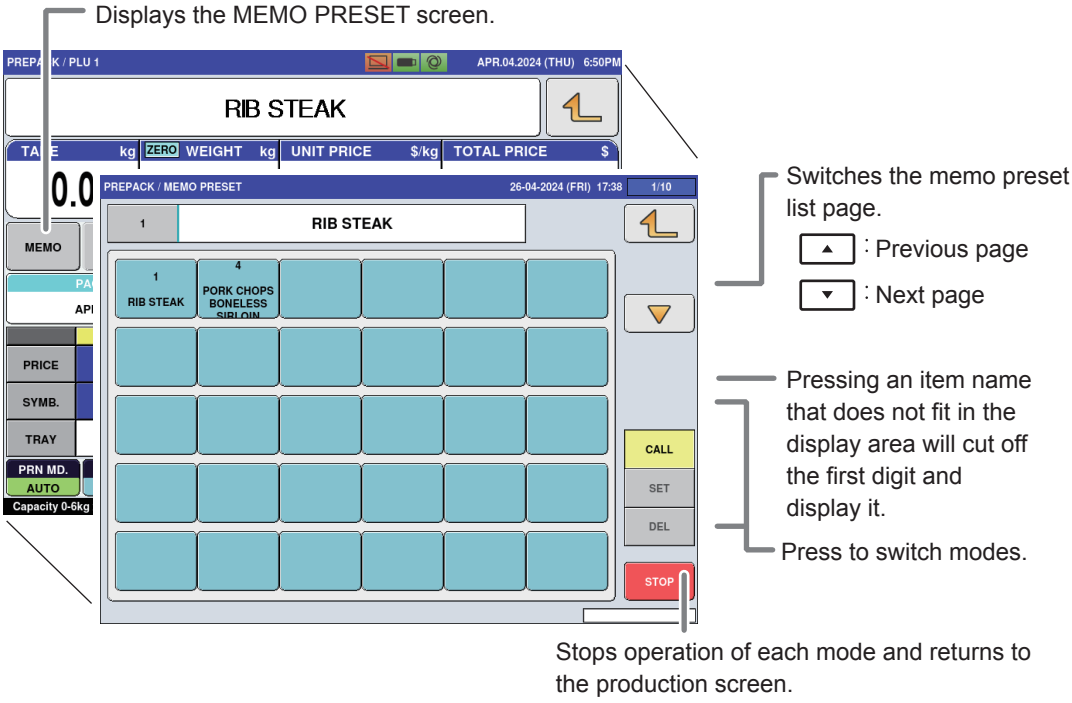

3.2.1 Registering Memo Preset Keys

Example: Register the selected “RIB STEAK” whose call number is “1” in the memo preset key.

1. Touch [MEMO] on the screen where the item you want to register is selected.

MEMO

The MEMO PRESET screen is displayed.

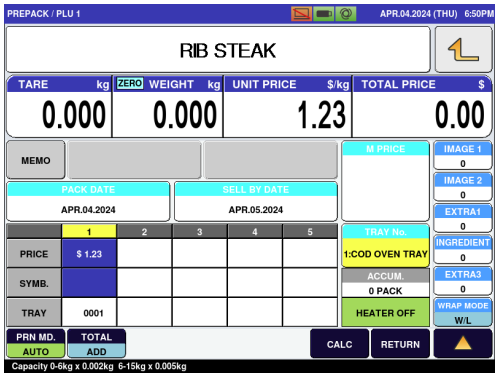

2. Touch [SET].

SET

The memo preset registration mode screen is displayed.

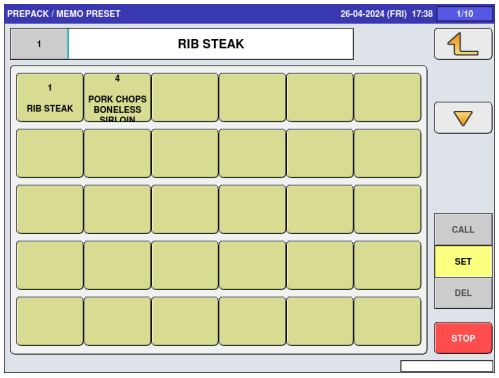

CAUTION

Touching a pre-registered memo preset key overwrites the data.

INFORMATION

The memo preset key can also be registered by touching the memo preset key after entering a numerical value.

8

3. Touch the memo preset key at the location you want to register.

The memo preset key has been registered.

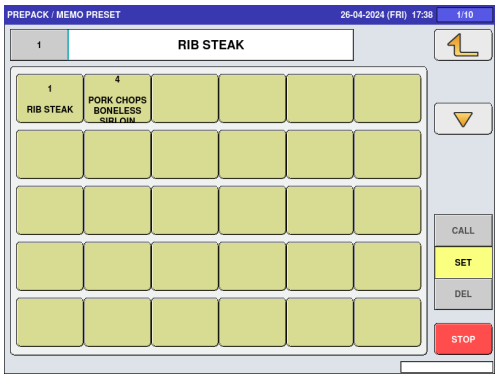

3.2.2 Calling Items by Using Memo Preset Key

Example: Use the memo preset key to call up “RIB STEAK”.

1. Touch [MEMO].

MEMO

The PREPACK/MEMO PRESET screen is displayed.

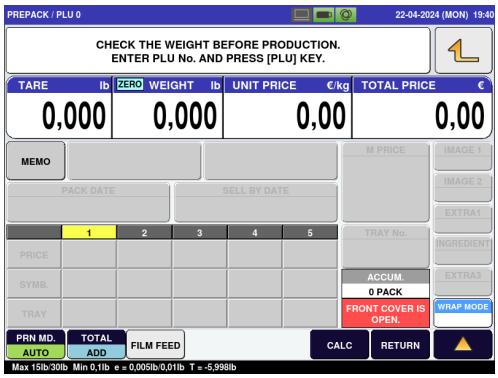

2. Touch the memo preset key where "RIB STEAK" is registered.

1
RIB STEAK

The system automatically returns to the production screen and displays the selected item data.

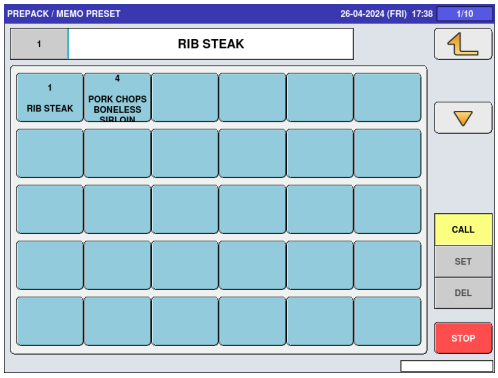

3.3 CHANGING AND ADDING ITEM DATA

If you want to change some of the item data registered during work, please follow the procedure below. This section describes how to perform unit price (fixed price) changes, tray changes, additions, and discounts.

3.3.1 Changing Unit Prices

Example: Change the current unit price to $2.00.

1. Enter the unit price you want to change using the numeric keypad on the screen where the product is selected.

2 0 0

The numerical value "200" is displayed in the field.

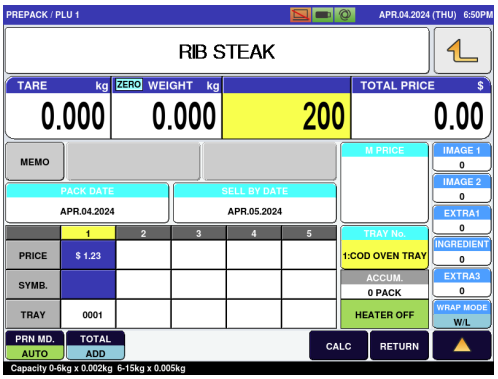

2. Press the [UNIT PRICE] stroke key.

UNIT PRICE

The unit price has been changed.

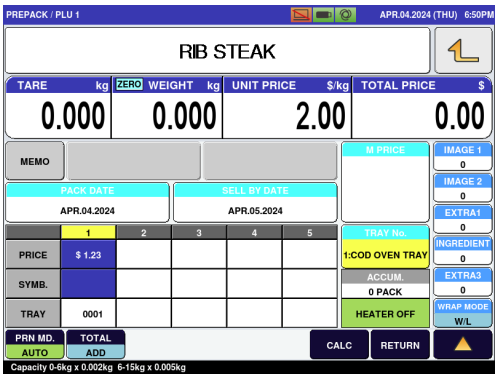

INFORMATION

You can also change the unit price by touching the unit price field after entering a numerical value using the numeric keypad.

INFORMATION

For fixed price items, touch [FIXED PRICE].

FIX
FIXED PRICE

- **If you want to change the unit price item to a fixed price item, touch [FIXED PRICE] after entering the fixed price.**

  FIX
  FIXED PRICE

  (If you want to change the unit price to the list price as it is, you do not need to enter a numerical value)

- **If you want to change from the fixed price item to a unit price item, touch [UNIT PRICE] after entering a numerical value.**

  UNIT PRICE

  (If you want to change the fixed price to a unit price as it is, you do not need to enter a numerical value)

3.3.2 Entering Tray Numbers in Tray Field of Price List

Each tray is numbered, and information such as tray name, size, and weight is managed for each number. Up to 5 tray numbers can be registered in the price list. Trays are automatically recognized from the price list data, so all trays that can be used with the called product must be registered in advance. (Wrapper only)

Example: Enter tray number "3" in price list 3.

REFERENCE

See “Tray Registration” on page 4-16.

1. Enter tray number "3" on the screen where the item is selected.

The value "3" is displayed in the field.

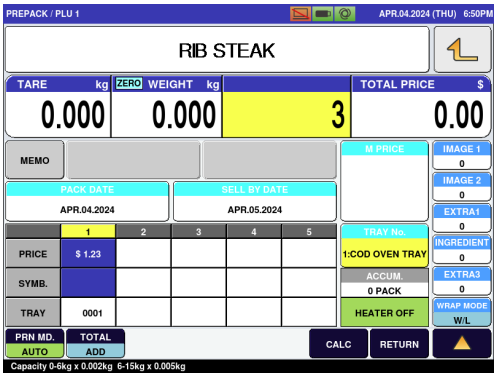

CAUTION

If you do not enter a unit price (or fixed price) after entering the tray number, refer to the selling price in Price 1 (on the left side of the price list).

2. Touch the tray field in price list 3.

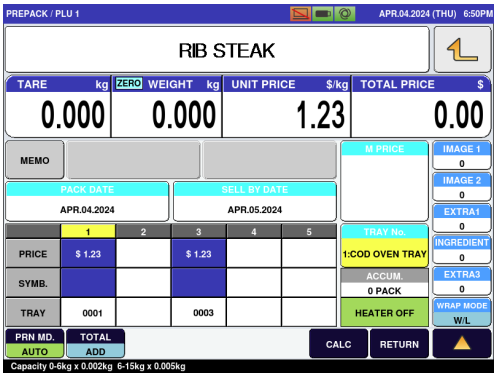

3.3.3 Entering Selling Prices in Price Field of Price List

By registering unit prices and fixed prices in the price list in advance, it is possible to operate using two different prices.

Example: Enter "Fixed price $5.00" in price list 3.

1. Enter "500" on the screen where the item is selected.

5 0 0

The value "500" is displayed in the field.

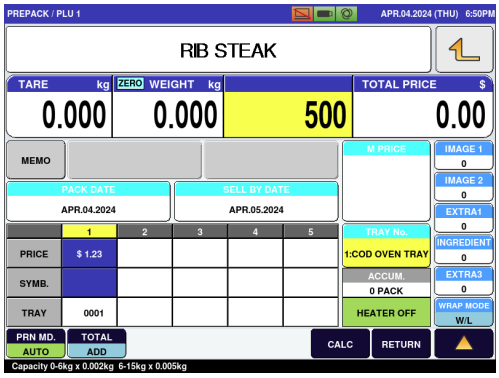

2. Touch the price field in price list 3.

3

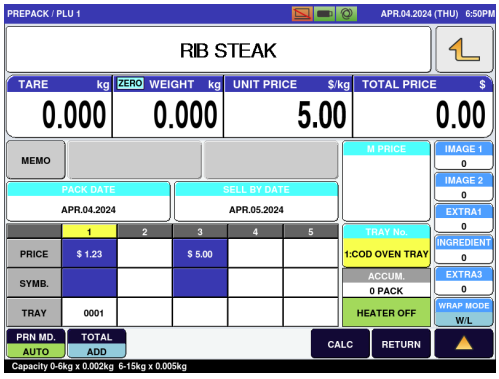

3. Touch [FIXED PRICE] to switch to the fixed price screen.

FIX
FIXED PRICE

The "kg" display disappears, and the fixed price appears.

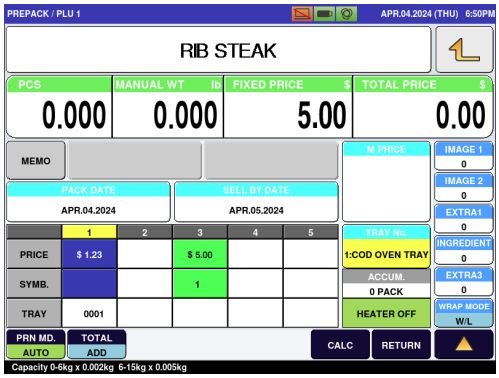

INFORMATION

When entering a numerical value, setting is made in the weighing mode (unit price or fixed price) registered in price list 1.

3.3.4 Changing Trays on Tray List Screen

This section describes how to change the tray on the tray screen if you do not know the tray number you want to use.

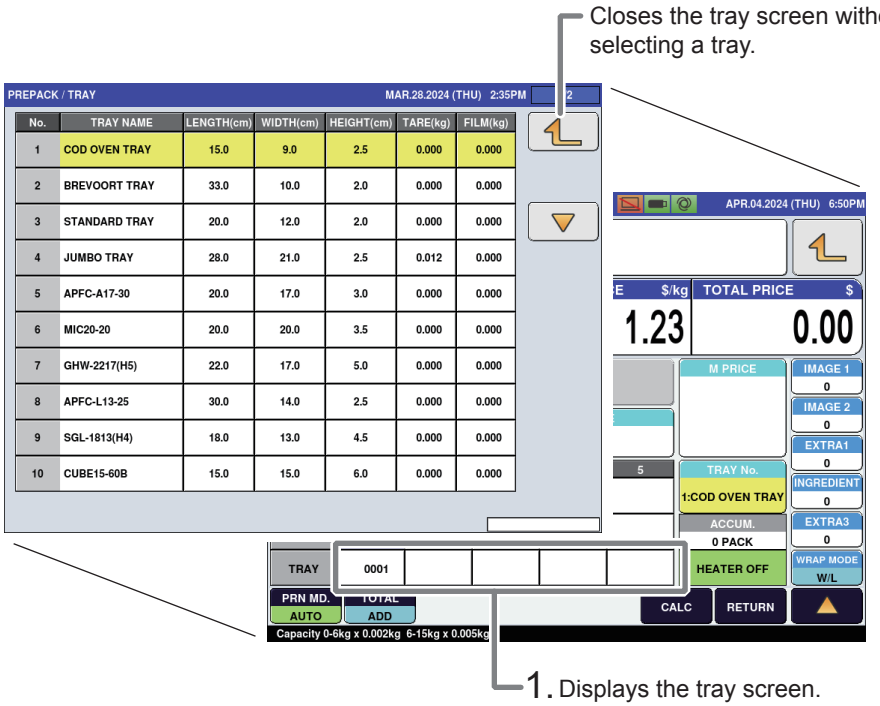

INFORMATION

If the tray that you want to call up is not displayed on the screen, touch △ or ▽ to switch pages.

1. Touch "TRAY" in the price list on the screen where the item is selected.

The TRAY screen is displayed.

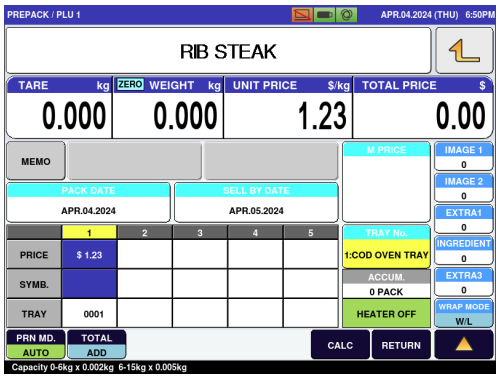

INFORMATION

You can also call up a tray by touching [PLU] after entering a tray number.

[1] [PLU]

2. Touch the display field of the tray to be used.

The system automatically returns to the production screen and displays the numerical value “1” is in the tray number display field.

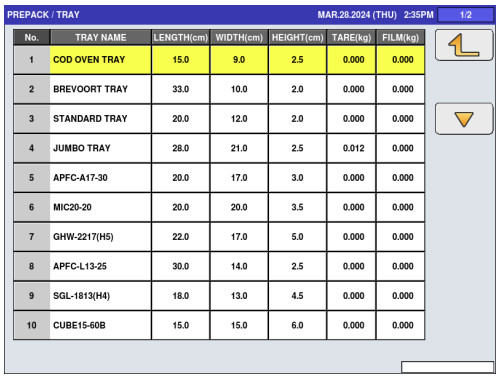

3.3.5 Changing Symbols for Fixed Price Items

Example: Change the quantity and symbol for a fixed price item.

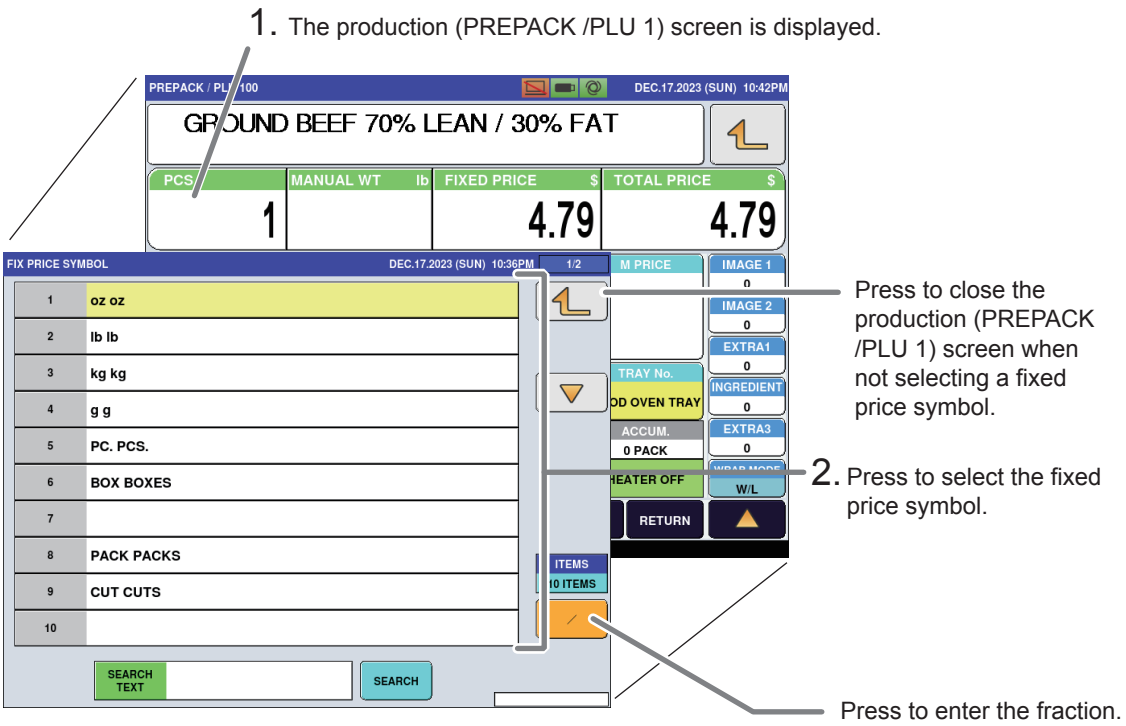

1. Touch [PCS] on the screen of the called commodity item.

PCS
1

The fixed price symbol list screen is displayed.

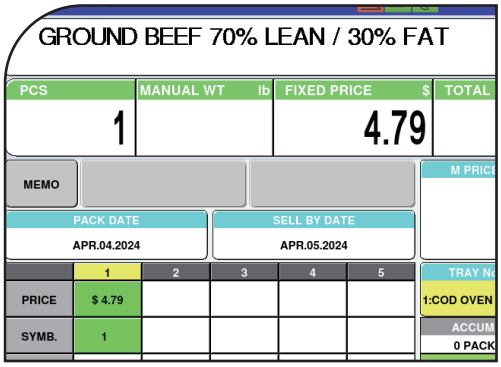

2. Enter the packing quantity and touch [SYMBOL].

Example: 5 pieces

5

8	PACK PACKS

After entering the packing quantity and symbol, the system returns to the production screen.

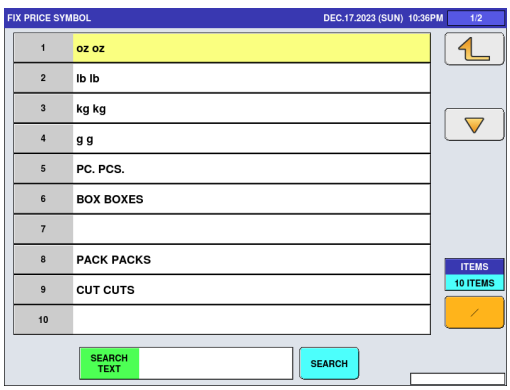

3.3.6 Performing Discount Processing

In addition to unit prices and fixed prices, discount prices can be pre-registered in the item data. There are six types of discount prices: markdown price, discount amount, discount rate, markdown unit price, discount unit price amount, and discount unit price rate. This section describes the discount processing method.

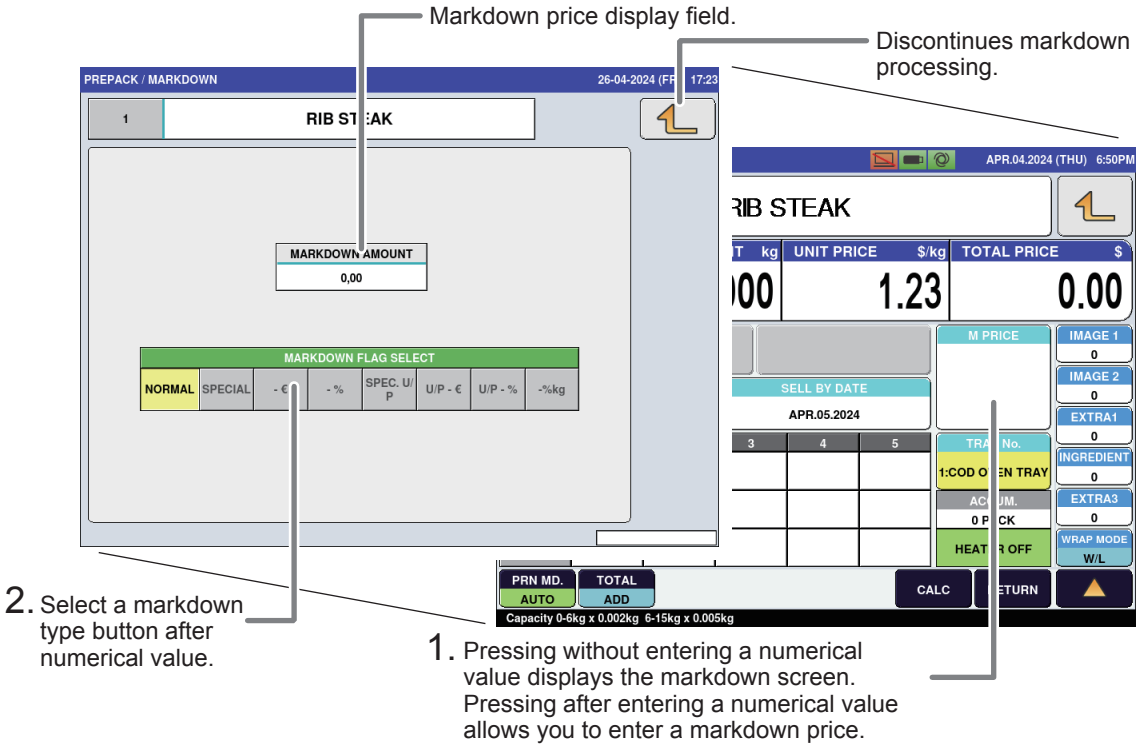

● How to discount

	Weighing item / Fixed price item
Special	1 Touch [M PRICE], then the markdown screen is displayed. 2 Touching [SPECIAL] in the markdown flag selection field after entering a numerical value on the markdown screen will automatically return to the production screen and display the set markdown price.
-$ (Discount amount)	1 Touch [M PRICE], then the markdown screen is displayed. 2 Touching [-$] in the markdown flag selection field after entering a numerical value on the markdown screen will automatically return to the production screen and display the set discount amount.
-% (Discount rate)	1 Touch [M PRICE], then the markdown screen is displayed. 2 Touching [-%] in the markdown flag selection field after entering a numerical value on the markdown screen will automatically return to the production screen and display the set discount rate.
Special unit price	1 Touch [M PRICE], then the markdown screen is displayed. 2 Touching [SPEC. U/C] in the markdown flag selection field after entering a numerical value on the markdown screen will automatically return to the production screen and display the set special unit price. (This setting cannot be made if the selected item is a fixed price item)
U/P- $ (Discount unit price amount)	1 Touch [M PRICE], then the markdown screen is displayed. 2 Touching [U/P -$] on the production (markdown) screen after entering a numerical value will automatically display the production screen and show the discount unit price amount.
U/P- % (Discount unit price rate)	1 Touch [M PRICE], then the markdown screen is displayed. 2 Touching [U/P -%] on the production screen after entering a numerical value will automatically display the production screen and show the discount unit price rate.

⚠ CAUTION

If the special price exceeds the usual price as a result of weighing, an error will be displayed when the label is issued.

3.4 CHANGING LABEL DATES AND TIMES

■ Pack/Sell By Date and Time Setting Screen

Touching the "PACK DATE" or "SELL BY DATE" field on the production screen will display the pack/sell by date screen.

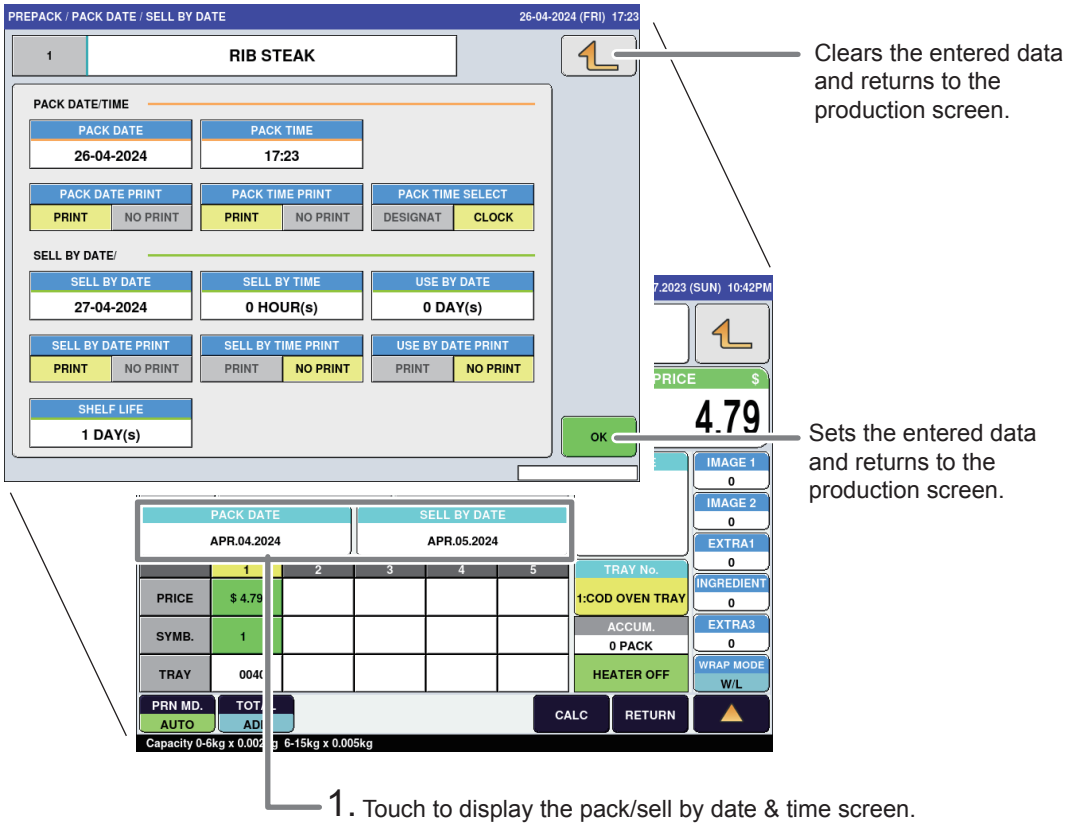

INFORMATION

To change the pack date or sell by date, touch the "PACK DATE" or "SELL BY DATE" field after entering a numerical value.

CAUTION

To print the pack time or sell by time, these times need to be set in advance. For details, please consult your ISHIDA dealer.

1. Pack Date

Pack date

Enter the pack date to be printed. 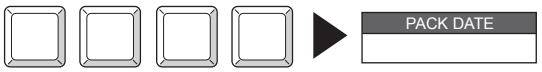

Pack date printing

PRINT : Select to print the pack date.

NO PRINT : Select not to print the pack date.

2. Pack Time

Pack time

Enter the time to be printed. 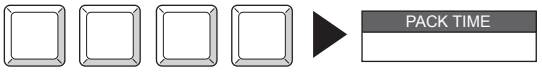

Pack time printing

PRINT : Select to print the pack time.

NO PRINT : Select not to print the pack time.

3. Pack Time Selection

DESIGNAT : Select to print the fixed date and time.

CLOCK : Select to print the current time.

4. Sell By Date

Sell by date

Used to change the set sell by date.

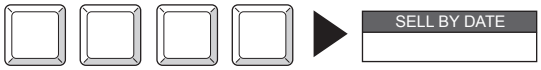

Sell by date printing

PRINT : Select to print the sell by date.

NO PRINT : Select not to print the sell by date.

5. Sell By Time

Sell by time

Enter the sell by time to be printed.
(Can be set up to 9999 hours later)
(Set as XX hours after the pack time)

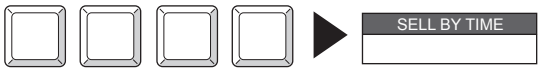

Sell by time printing

PRINT : Select to print the sell by time.

NO PRINT : Select not to print the sell by time.

6. Shelf Life

Enter the shelf life.
(Can be set from 0 to 9999 days)
The entered shelf life is reflected in the sell by date.

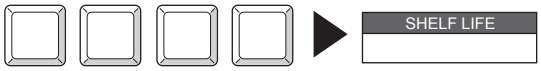

Note:
Pack date cannot be set exceeding the sell by date.

3.5 CHECKING LABEL PRINTING CONTENT

The label preview screen can be used to check if the desired items are printable.

1. Touch the "Item Name" display field on the screen where the item is selected.

RIB STEAK

The label preview screen is displayed.

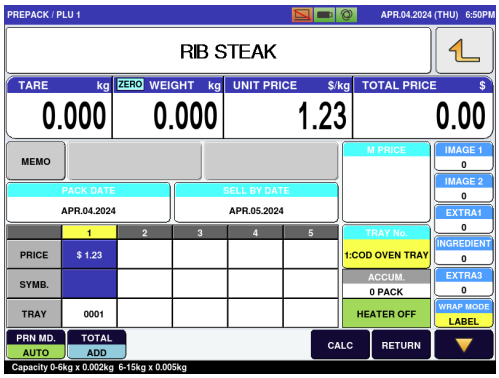

2. Check for input errors or omissions in label printing items.

3. After checking, touch the Return button.

The system returns to the production screen.

3.6 USEFUL FEATURES OF FUNCTION KEYS

This section describes useful ways to use the function keys.
Perform each operation for the selected item.
(Function key positions may be changed by the program at the time of installation)

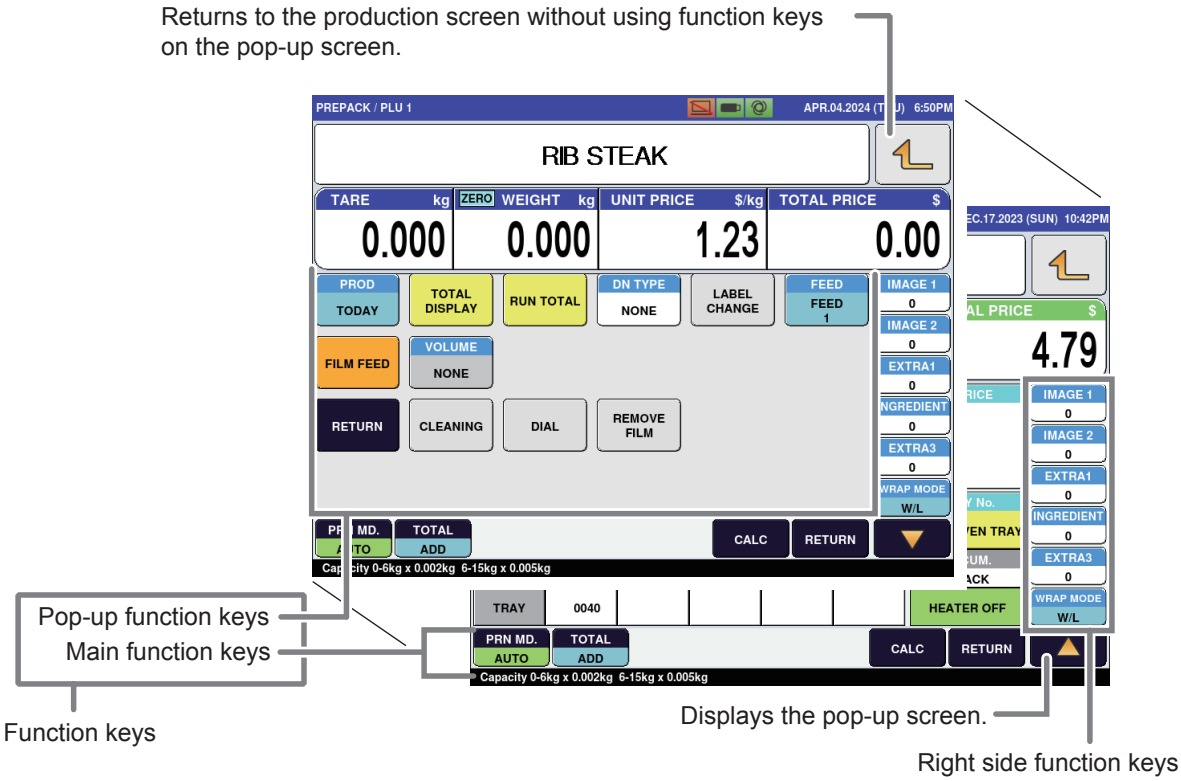

■ Function Key Description

Function Key	Function and Usage
TARE	• Recognizes the weight currently being weighed as the tare weight.
F/P	• Changes the commodity item to a fixed price item. Note: For operating instructions, please consult your ISHIDA dealer.
VOID	• Deletes the results of the commodity item most recently fed into the wrapper (on the lift unit) or labeled (on the discharge unit). • If there are commodity items both on the lift and on the discharge unit, a VOID screen is displayed to select the item.
RUN TOTAL	• Issues a label containing information on the total number of labels (number of packs), total weight, and total price since the last time the same key was touched. • Prints the name of the commodity item called on the screen. (Subtotal data is cleared when the subtotal label is printed) Note: For operating instructions, please consult your ISHIDA dealer.
FIX PR +WEIGHT	• Changes the commodity item to a fixed price and weight item. Note: For operating instructions, please consult your ISHIDA dealer.
CLR	• Deletes the entered numerical value.
PRINT	• Prints a label.

Function Key	Function and Usage
FEED	• Feeds the label forward.
U/P	• Changes the commodity item to a unit price item. Note: For operating instructions, please consult your ISHIDA dealer.
BAR Y/N YES	• Switches the mode between "BARCODE (YES)" and "BARCODE (NO)". • Prohibits printing barcodes on front labels.
TOTAL DISPLAY	• Displays the production total screen. • Pressing the PRINT stroke key issues a total label.
CALC.	• Displays the calculator screen.
FIX UPR	• Changes the commodity item to a fixed unit price item. Note: For operating instructions, please consult your ISHIDA dealer.
ERROR LOG	• Displays the error log screen.
KEY LOCK ON	• Switches the mode between “KEY LOCK (ON)” and “KEY LOCK (OFF)”. • Keys (stroke keys, touch-panel keys, and function keys) can be locked or released.
PRN MD. AUTO	• Switches the mode between “AUTO” and “MANUAL”. PRN MD. AUTO : Printing starts automatically as soon as the weighing is stabilized. PRN MD. MANUAL : Printing is started automatically by pressing the PRINT stroke key after the weighing has stabilized. PRN MD. MANUAL can be used only for unit price items. If PRN MD. MANUAL is used for fixed-price or fixed-unit-price items, an error sound is heard.
1/2	• Halves the price of the fixed-price item.
TOTAL ADD ADD	• Switches the add mode in the following order: TOTAL ADD ADD ▶ TOTAL ADD NON PRT ▶ TOTAL ADD NON ADD ▶ TOTAL ADD ADD TOTAL ADD ADD : Issues a label and adds the production data to the total. TOTAL ADD NON PRT : Adds the production data to the total without issuing a label. TOTAL ADD NON ADD : Issues a label without adding the production data to the total.
TRACE	• Displays and corrects the set traceability information. Note: For operating instructions, please consult your ISHIDA dealer.
PASSPORT	• Prints passport labels for traceability. Note: For operating instructions, please consult your ISHIDA dealer.
MINCE	• Opens the minced meat traceability data creation screen. Generates the minced meat traceability data in advance when the commodity item is not called. Note: For operating instructions, please consult your ISHIDA dealer.
U/P 100g	• Changes the item to a unit price (100 g) item. Note: For operating instructions, please consult your ISHIDA dealer.
00	• Inputs “0” twice.

Function Key	Function and Usage
.	• Inputs the decimal point.
0 to 9	• Enter any number from 0 to 9. This function is the same as the numeric keys on the numeric keypad.
PLU CALL	• Calls up the commodity item when touched after numerical entry. This function is the same as the PLU key on the numeric keypad
ZERO	• Executes zero-point adjustment.
TODAY TODAY	• Switches the mode in the following order: TODAY TODAY ▶ TODAY REPACK ▶ TODAY TODAY
CHECK WGT	• Displays the lower/upper weight screen.
DEL PLU(S)	• Deletes all totals of the item on the screen ever produced from the time it was selected.
LABEL CHANGE	• Displays the label change screen.
DN TYPE NONE	• Displays the 2nd label type screen. DN TYPE NONE ▶ DN TYPE BARCODE ▶ DN TYPE ONLY INGR. ▶ DN TYPE INGR.+BAR Note: The number of 2nd label types can be increased by setting. For details, please consult your ISHIDA dealer.
UP PRN YES	• Switches the mode between “UP PRN (YES)” and “UP PRN (NO)”.
DN PRN YES	• Switches the mode between “DN PRN (YES)” and “DN PRN (NO)”. • Enabled only for items with 2nd label setting.
UP TYPE REF.	• Switches the mode between “UP TYPE (REF.)” and “UP TYPE (FIX)”. • Fixes the issuing printer and cassette format.
EYE CATCH YES	• Switches the mode between “EYE CATCH (YES)” and “EYE CATCH (NO)”.
SUB PRN YES	• Switches the mode between “SUB PRN (YES)” and “SUB PRN (NO)”. • Enabled only for items for which sub-labels have been set, when a sub-labeler (PP-AI, etc.) is connected.
MEMO	• Displays the memo preset screen.
JUMP GROUP	• Jumps to the designated function group.
JUMP PAGE	• Jumps to the designated function page.

Function Key	Function and Usage
▲	• Displays the pop-up function key screen.
DISP IMG LD.	• Loads images stored in a USB flash drive.
PREV. PAGE	• Switches to the previous page.
NEXT PAGE	• Switches to the next page.
MENU JUMP	• Displays the menu jump screen.
PRN MODE PEEL	• Switches the mode between “PRN MODE (PEEL)” and “PRN MODE (NON-PEEL)”.
MULTI	• Multiply the quantity of the fixed price item by the specified number.
SPECIAL 0.00	• Sets the special price when touched after numeric entry. 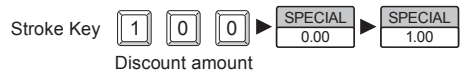 • Releases the setting when touched after entering “0”. Note: See “Performing Discount Processing” on page 3-11.
-$ 0.00	• Sets the discount amount when touched after numeric entry. 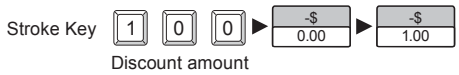 • To release the setting, touch the button after entering “0”. Note: See “Performing Discount Processing” on page 3-11.
-% 0.0	• Sets the discount rate when touched after numeric entry. 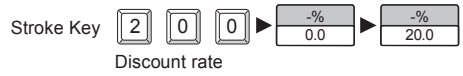 • To release the setting, touch the button after entering “0”. Note: See “Performing Discount Processing” on page 3-11.
POP 0	• Sets the POP message when touched after numeric entry. 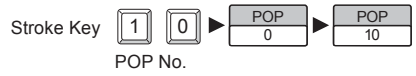 • Displays the POP message screen when touched after numeric entry. • Sets the POP message when the display item is touched or when a numeric value is entered. 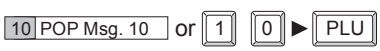 • To release the setting, touch the display item after entering “0”. Note: See “Extra Message Registration” on page 4-37.

Function Key	Function and Usage
COUPONS 0	• Sets the coupon message when touched after numeric entry. Stroke Key [1] [0] ▶ COUPONS 0 ▶ COUPONS 10 Coupon No. • Displays the coupon message screen when touched after numeric entry. • Sets the coupon message when the display item is touched or when a numeric value is entered. 10 Coupon Msg.10 or [1] [0] ▶ PLU • To release the setting, touch the button after entering “0”. Note: See “Extra Message Registration” on page 4-37.
% TARE 0.0	• Sets the tare rate when touched after numeric entry. Stroke Key [2] [0] ▶ % TARE 0.0 ▶ % TARE 2.0 Discount rate • To release the setting, touch the button after entering “0”.
EXTRA 1 0	• Sets the extra message when touched after numeric entry. Stroke Key [1] [0] ▶ EXTRA1 0 ▶ EXTRA1 10 Extra 1 No. • Sets the extra message screen when touched after numeric entry. • Sets the extra message when touched after numeric entry. • 10 Extra Msg. 10 or [1] [0] ▶ PLU • To release the setting, touch the button after entering “0”. Note: See “Extra Message Registration” on page 4-37.
INGREDIENT 0	• Sets the ingredient when touched after numeric entry. Stroke Key [1] [0] ▶ INGRADIENT 0 ▶ INGRADIENT 10 Ingradient No. • Displays the Ingredient when touched after numeric entry. • Sets the ingredient when touched after numeric entry. • 10 Ingradient 10 or [1] [0] ▶ PLU • To release the setting, touch the button after entering “0”. Note: See “Extra Message Registration” on page 4-37.
SP(U/P) 0.00	• Sets the special unit price when touched after numeric entry. Stroke Key [1] [0] [0] ▶ SP(UP) 0.00 ▶ SP(UP) 1.00 Special Unit Price • To release the setting, touch the button after entering “0”. Note: See “Performing Discount Processing” on page 3-11.
FORMAT 1 0	• Sets the label format when touched after numeric entry. Stroke Key [1] [0] ▶ FORMAT 1 0 ▶ FORMAT 1 10 Format No. • Displays the format screen when touched after numeric entry. • Sets the format when touched after numeric entry. 10 USA/W:56.00XH:59.00 or [1] [0] ▶ PLU • To release the setting, touch the button after entering “0”. Note: For format settings, please consult your ISHIDA dealer.

Function Key	Function and Usage
IMAGE 1 0	• Sets the image when touched after numeric entry. Stroke Key [1] [0] ▶ IMAGE 0 ▶ IMAGE 10 Image No. • Displays the image screen when touched after numeric entry. • Sets the image when the display item is touched or when a numeric value is entered. • 10 or [1] [0] ▶ PLU • To release the setting, touch the button after entering “0”. Note: For image settings, please consult your ISHIDA dealer.
-%(U/P) 0.0	• Sets the special unit price when touched after numeric entry. Stroke Key [1] [0] [0] ▶ -$(UP) 0.00 ▶ -$(UP) 1.00 Special Unit Price • To release the setting, touch the button after entering “0”. Note: See “Performing Discount Processing” on page 3-11.
P DATE AL08.2015	• Sets the pack date when touched after numeric entry. Stroke Key [0] [5] [1] [5] [2] [0] [1] [5] ▶ P DATE AL.20.2015 ▶ P DATE MA.15.2015 Pack Date • Touching this button without entering a numeric value will display the Pack Date /Sell By Date screen. Note: See “Changing the Label Dates and Time” on page 3-12.
S DATE AL08.2015	• Sets the sell by date when touched after numerical entry, Stroke Key [0] [5] [1] [5] [2] [0] [1] [5] ▶ S DATE AL.20.2015 ▶ S DATE MA.15.2015 Sell By Date • When touched without any numerical entry, the Pack Date /Sell By Date screen is displayed. Note: See “Changing the Label Dates and Time” on page 3-12.
FREE MSG1 0	• Sets the free message when touched after numerical entry. Stroke Key [1] [0] ▶ FREE MSG. 1 0 ▶ FREE MSG. 1 10 Free Message No. • When touched without any numerical entry, the Free Message screen is displayed. • Sets the free message when the display item is touched or when a numeric value is entered. • 10 Free Msg. 10 or [1] [0] ▶ PLU • To release the setting, touch the button after entering “0”. Note: See “Extra Message Registration” on page 4-37.
TARGET 0/0	• Displays the target screen. In this screen, select the target type (QTY, WEIGHT, PRICE). Then enter the number and touch the “TARGET” field in this screen. • Decides the production quantity for each item. Once the set production target is completed, a message appears to reset the target again. Set "0" to end this function.
-%(U/P) 0.0	• Sets the unit price discount rate when touched after numeric entry. Stroke Key [2] [0] [0] ▶ -% (UP) 0.0 ▶ -% (UP) 20.0 Unit Price Discount rate • To release the setting, touch the button after entering “0”. Note: See “Performing Discount Processing” on page 3-11. Note: For operating instructions, please consult your ISHIDA dealer.

Function Key	Function and Usage
PLU No. 1	• Displays the PLU screen and selects the designated commodity item when touched after numeric entry. Stroke Key [4] ▶ FREE MSG. 1 [0] ▶ FREE MSG. 1 [10] PLU No. • Touching this button without entering a numeric value will display the PLU screen. • Sets the commodity item when the display item is touched or when a numeric value is entered. 4 PORK CHOPS BONELESS SIRLOIN or [4] ▶ [PLU] Note: See “Calling Item Data from Displayed List” on page 3-2.
MEMORY -%	• Displays the memory remaining capacity of the inserted USB memory.
LWT kg 0.000	• Sets the lower weight when touched after numerical entry. Stroke Key [5] [0] [0] ▶ LWT kg [0.000] ▶ LWT kg [0.500] Lower Weight • When touched without any numerical entry, the Upper/Lower Weight screen is displayed. • To release the setting, touch the button after entering “0”.
UWT kg 0.000	• Sets the upper weight when touched after numerical entry. Stroke Key [5] [0] [0] ▶ UWT kg [0.000] ▶ UWT kg [0.500] Upper Weight • Touching this button without entering a numeric value will display the Upper/Lower Weight screen. • To release the setting, touch the button after entering “0”.
TEST No.	• Displays the test number of the meat cutting test. Note: For operating instructions, please consult your ISHIDA dealer.
OPERATOR No.	• Displays the operator number of the meat cutting test. Note: For operating instructions, please consult your ISHIDA dealer.
VENDOR No.	• Displays the vendor number of the meat cutting test. Note: For operating instructions, please consult your ISHIDA dealer.
PRODUCT No.	• Displays the item number of the meat cutting test. Note: For operating instructions, please consult your ISHIDA dealer.
M PRICE	• Sets the markdown price when touched after numerical entry. Stroke Key [1] [0] [0] ▶ M PRICE ▶ M PRICE SPECIAL:1.00 Markdown Price • Touching this button without entering a numeric value will display the Markdown screen. • To release the setting, touch the button after entering “0”. Note: See “Performing Discount Processing” on page 3-11.
TRAY No.	• Sets the tray number when touched after numerical entry. Stroke Key [2] ▶ TRAY No. ▶ TRAY No. 0002: Tray No. • Touching this button without entering a numeric value will display the Tray screen. • Sets the tray number when the display item is touched or when a numeric value is entered. 2 BREVOORT TRAY or [2] ▶ [PLU] • To release the setting, touch the button after entering “0”. Note: See “Changing Trays on Tray List Screen” onpage 3-9.

Function Key	Function and Usage
GUIDE 0 PACK	• Displays the total quantity.
STATE	• Displays the status. (Heater temperature, Emergency stop, etc.)
PRICE GRP	• These are function keys that constitute the selling price list. • Respectively displays the selling price number, unit price or price, fixed-price quantity, and tray number.
PRICE GRP PRICE	
PRICE GRP SYMB	
PRICE GRP TRAY	
PACK CNT 0	• Displays the subtotal quantity.
PACK WT LB 0.000	• Displays the subtotal weight.
PACK PRICE 0.00	• Displays the subtotal price.
U.FIX FMT 0	• Sets the label format when touched after numeric entry. Stroke Key [1] [0] ▶ U.FIX FMT 0 ▶ U.FIX FMT 10 Format No. • Displays the format screen when touched after numeric entry. • Sets the format when touched after numeric entry. 10 USA/W:56.00XH:59.00 or [1] [0] ▶ PLU • To release the setting, touch the button after entering “0”. Note: For format settings, please consult your ISHIDA dealer.
MASTER RECEIVE MAR.25.2024 (MON)	• Displays the time when the last commodity item or material master was received.

CHAPTER 4

DATA REGISTRATION

4.1 PROGRAM MENU

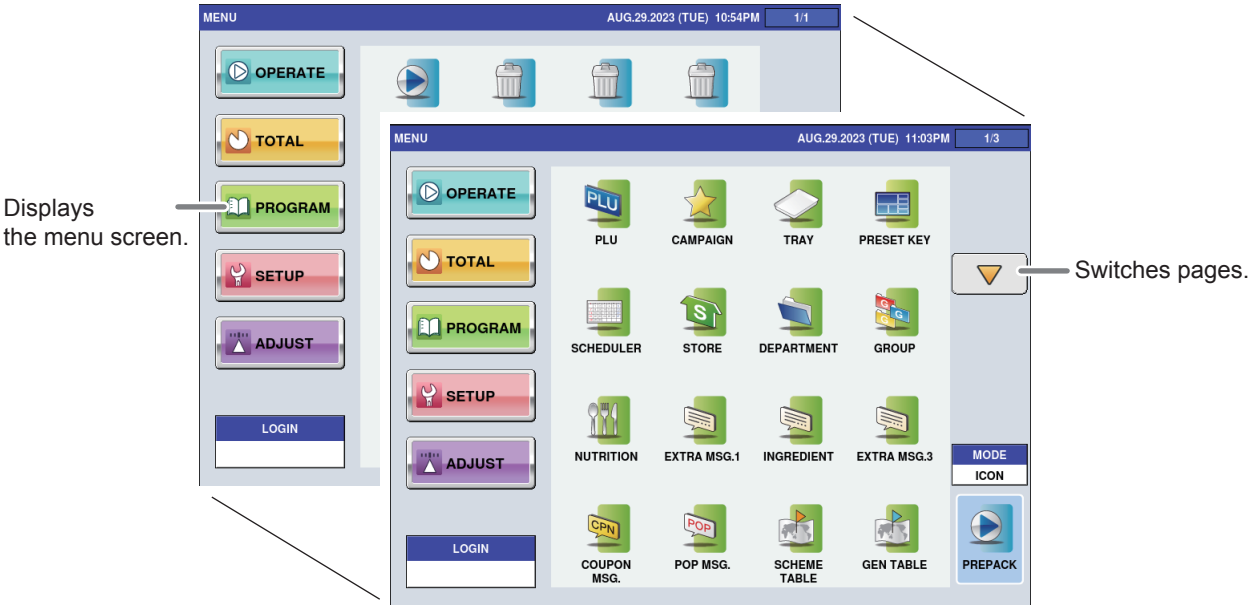

Registration Item	Description
PLU	Used for registering commodity item names, unit prices, fixed prices, tares, registration codes, and POP numbers. Note: Register the linked data attached to the commodity item before registering the item. ex. Extra MSG1.3…
CAMPAIGN	Used for registering campaign settings.
TRAY	Used for registering information such as tray size, tray weight, film weight and the name.
PRESET KEY	Used for registering or editing preset keys.
SCHEDULER	Used for registering schedules such as events.
STORE	Used for registering store addresses and names.
DEPARTMENT	Used for registering department names.
GROUP	Used for registering group names.
NUTRITION	Used for registering nutrition panels.
EXTRA MSG. 1, 3	Used for registering extra messages.
INGREDIENT	Used for registering settings for frequently used component names.
COUPON MSG.	Used for registering coupon messages.
POP MSG.	Used for registering POP messages.
SCHEME TABLE	Used for registering scheme tables to be used for traceability.
GEN TABLE	Used for registering Gen tables to be used for traceability.
LOOKUP TABLE	Used for registering lookup tables to be used for traceability.
MINCE TRACE.	Used for registering information on the traceability of mincemeat.
FIX PRI. SYMBOL	Used for registering fixed price symbol names.
FREE MSG. 1-15	Used for registering up to 15 free messages.
CHECK LABEL	Used for checking labels.
NUTRITION TEXT	Used for registering nutrition texts.

4.2 PLU REGISTRATION

The name of a commodity item and data related to the commodity item (unit price, fixed price, tare weight, registration code, POP call number, etc.) can be registered. Select the commodity item field on the commodity PLU list screen and register the commodity item data. To register commodity item data, follow the procedure below.

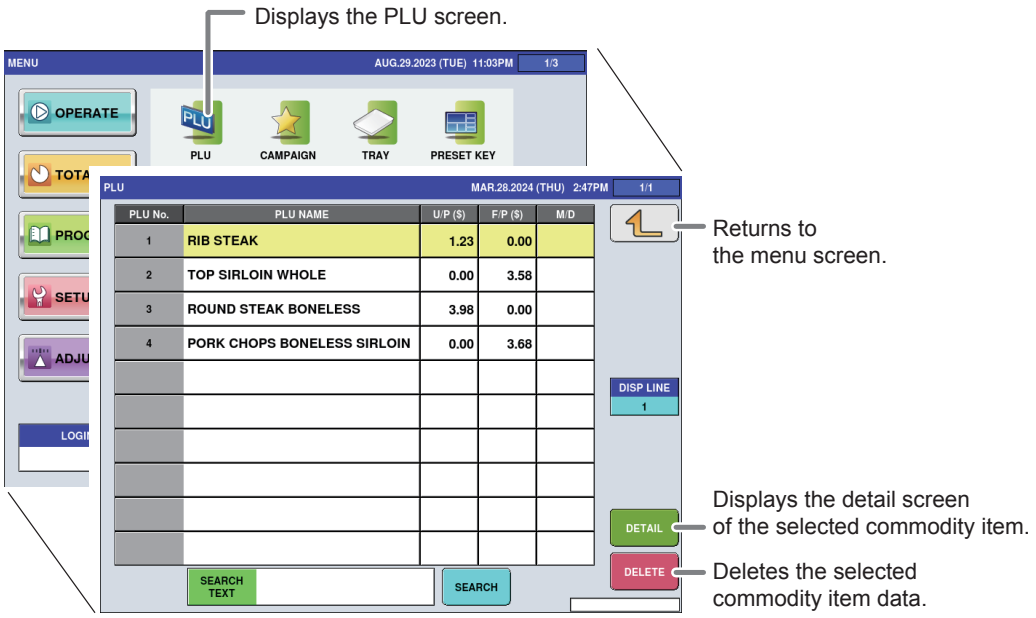

1. Touch [PLU] on the menu screen.

The commodity PLU list screen is displayed.

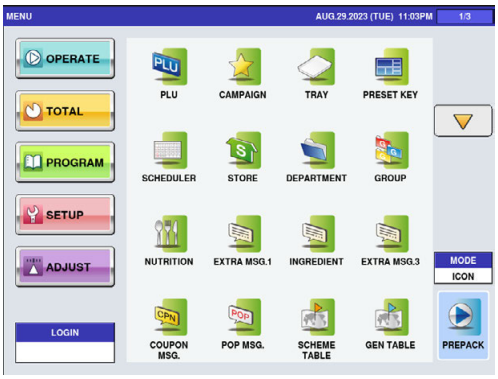

2. Enter the commodity item call number.

Example: Call number 1

1 PLU

Up to 8 digits (1 to 99999999) can be entered for a commodity item call number.
The price/tare screen for commodity item data registration is displayed.

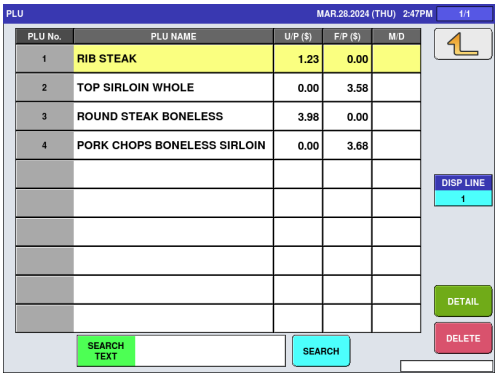

REFERENCE

To edit the registered campaign data, touch the field of the campaign data you want to edit and touch [DETAIL]. Touching [DELETE] will delete the data.

REFERENCE

The commodity item data registration screen consists of multiple screens. Touch one of the tabs at the bottom of the screen to switch screens and register each item.

4.2.1 PLU Detail (SALE 1) Registration

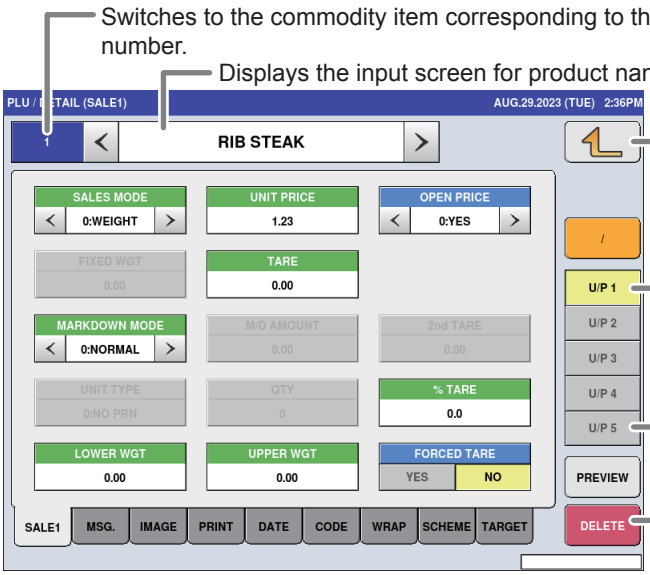

■ How to Register Each Item

Select the desired registration item and enter the details.

Item	Descriptions
SALES MODE	Touch [<] or [>] to select the desired sales mode.
	0: Weight (for selling weighing items) 1: Fixed price (for selling fixed price items) 2: Weight fixed price (for selling weighing fixed price items) 3: Fixed unit price (for selling fixed unit price items) 4: Weight (100 g) (when the unit price per 100g needs to be set in accordance with the laws of a country)
UNIT PRICE / FIXED PRICE	Enter the unit price or fixed price and touch this field.
OPEN PRICE	Touch [<] or [>] to select whether or not to allow an open pricing system.
	0: Yes 1: No
FIXED WEIGHT	Enter the fixed weight and touch this field.
TARE	Enter the tare weight and touch this field.
MARKDOWN MODE	Touch [<] or [>] to select the desired markdown mode.
	0: Normal price 1: Special price 2: Amount discount for total price 3: Percent discount for total price 4: Special unit price 5: Amount discount for unit price 6: Percent discount for unit price
M/D AMOUNT	Enter the markdown amount or percentage and touch this field.
2ND TARE	Enter the tare weight and touch this field.

UNIT TYPE	Touch the “UNIT TYPE” field to display the “Fix Price Symbol” screen. Then, touch the desired field for selection. 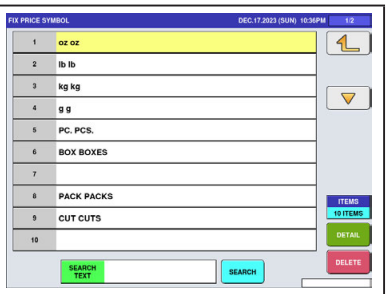
QTY	Enter the pack quantity and touch this field.
%TARE	Enter the tare percentage and touch this field.
LOWER WEIGHT	Enter the lower weight limit and touch this field.
UPPER WEIGHT	Enter the upper weight limit and touch this field.
FORCED TARE	Touch [YES] or [NO] to select whether or not to use the forced tare function.

4.2.2 PLU Detail (MSG.) Registration

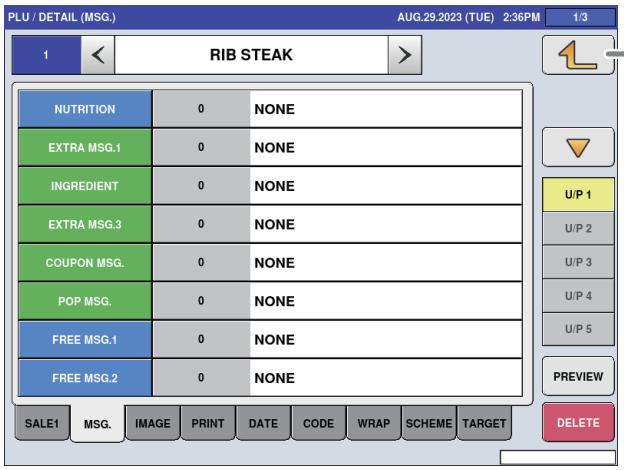

Returns to the PLU list screen.

■ How to Register Each Item

Select the desired registration item and enter the details.

Item	Descriptions
NUTRITION EXTRA MSG 1,3 INGREDIENT COUPON MSG. POP MSG. GROUP FREE MSG. 1-15 NUTRITION TEXT	Touch a desired field for selection. 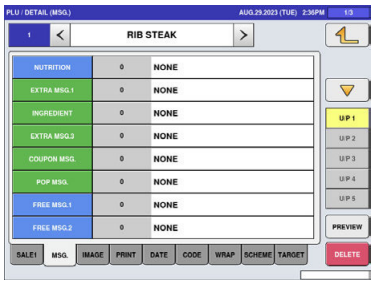 The extra message screen is displayed. Touch the desired field for selection. 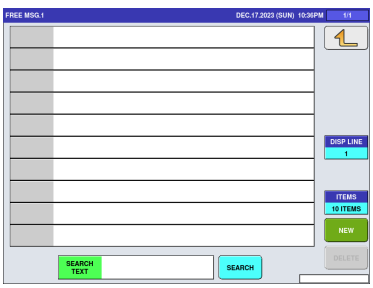

4.2.3 PLU Detail (IMAGE) Registration

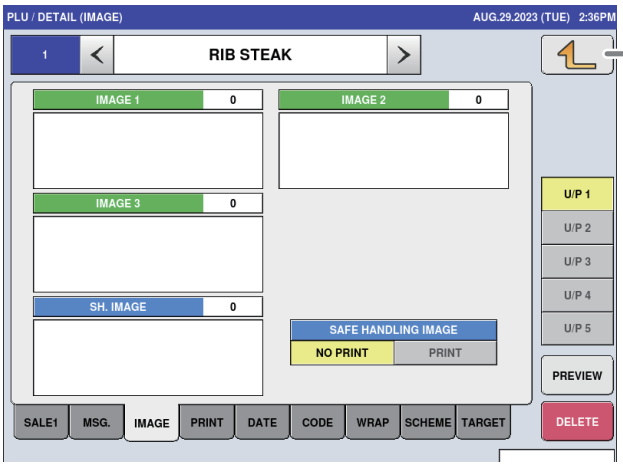

Returns to the PLU list screen.

■ How to Register Each Item

Touch the desired registration item to select the content.

Item	Descriptions
IMAGE1,2,3 SH.IMAGE	Touch the desired field for selection. 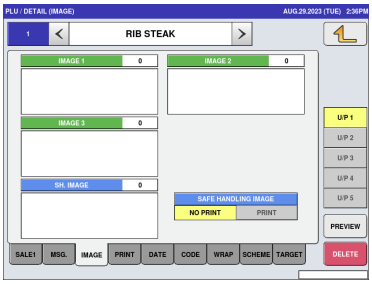 The image screen is displayed. Touch the desired field for selection. 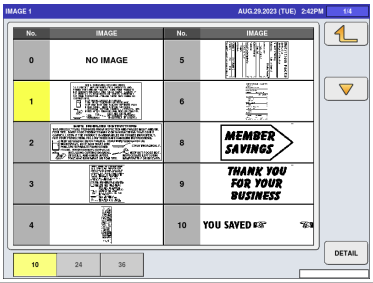
SAFE HANDLING IMAGE	Touch [NO PRINT] or [PRINT] to select whether or not to print the image.

4.2.4 PLU Detail (PRINT) Registration

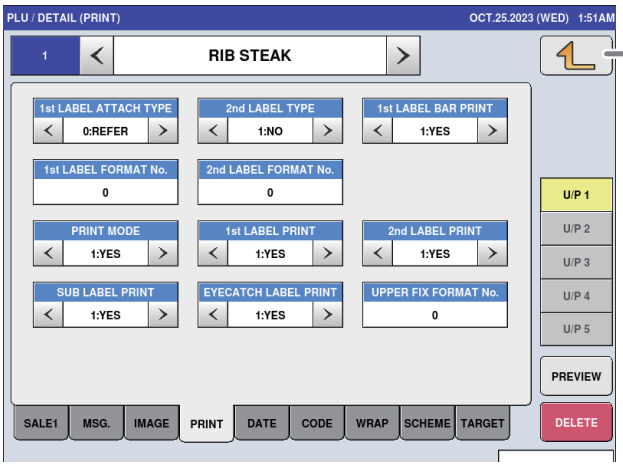

Returns to the PLU list screen.

■ How to Register Each Item

Select the desired registration item and enter the details.

Item	Descriptions
1ST LABEL ATTACH TYPE	Touch [<] or [>] to select whether or not to fix front labeling.
	0: Refer 1: Fixing
2ND LABEL TYPE	Touch [<] or [>] to select the printing type of back labels.
	1: No 2: Under barcode 3: Ingredients 4: Ingredients + Barcode
1ST LABEL BAR PRINT	Touch [<] or [>] to select whether or not to print the barcode on the first label.
	1: Yes 2: No
1ST LABEL FORMAT NO.	Enter the desired format number and touch this field.
2ND LABEL FORMAT NO.	Enter the desired format number and touch this field.
PRINT MODE	Touch [<] or [>] to select whether or not to issue labels.
	1: Yes 2: No
1ST LABEL PRINT	Touch [<] or [>] to select whether or not to print the first label.
	1: Yes 2: No
2ND LABEL PRINT	Touch [<] or [>] to select whether or not to print the second label.
	1: Yes 2: No
SUB LABEL PRINT	Touch [<] or [>] to select whether or not to print the sub label.
	1: Yes 2: No
EYECATCH LABEL PRINT	Touch [<] or [>] to select whether or not to print the eye-catch label.
	1: Yes 2: No
UPPER FIX FORMAT No.	Enter the desired format number and touch this field.

4.2.5 PLU Detail (DATE) Registration

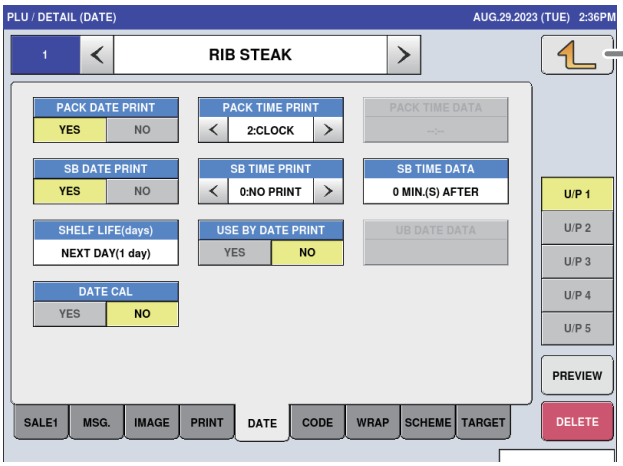

Returns to the PLU list screen.

■ How to Register Each Item

Select the desired registration item and enter the details.

Item	Descriptions
PACK DATE PRINT	Touch [YES] or [NO] in this field to select whether or not to print the pack date.
PACK TIME PRINT	Touch [<] or [>] to select the desired pack time printing method.
	0: No print 1: Designated time 2: System clock time
PACK TIME DATA	This field is available only when “1: Designated time” is selected in “PACK TIME PRINT”. Enter the time and touch this field.
SB DATE PRINT	Touch [YES] or [NO] in this field to select whether or not to print the sell by date.
SB TIME PRINT	Touch [<] or [>] to select the desired sell by time printing method.
	0: No print 1: Designated time 2: Relative time
SB TIME DATA	This field is available only when “Yes” is selected in “SB TIME PRINT”. Enter the number of hours and touch this field.
SHELF LIFE (DAYS)	This field is available only when “Yes” is selected in “SB DATE PRINT”. Enter the number of days and touch this field.
USE BY DATE PRINT	Touch [YES] or [NO] in this field to select whether or not to print the use by date.
UB DATE DATA	This field is available only when “Yes” is selected in “USE BY DATE PRINT”. Enter the number of hours and touch this field.
DATE CAL	Touch [YES] or [NO] in this field to select whether or not to select production to the next day.

4.2.6 PLU Detail (CODE) Registration

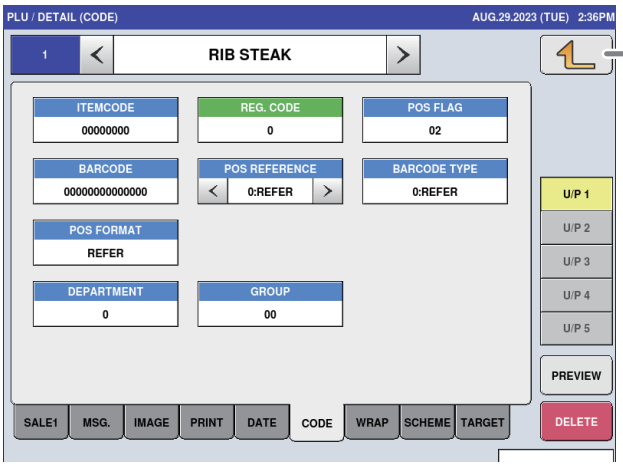

Returns to the PLU list screen.

■ How to Register Each Item

Select the desired registration item and enter the details.

Item	Descriptions
ITEM CODE	Enter the item number and touch this field.
REG CODE	Enter the register code and touch this field.
POS FLAG	Enter the POS flag number and touch this field.
BARCODE	Enter the barcode number and touch this field.
POS REFERENCE	Touch [<] or [>] to select the desired reference method.
	0: Refer 1: POS file
BARCODE TYPE	This field is available only when “1: POS File” is selected in “POS REFERENCE”. Touch this field to display the barcode type screen and touch the desired POS type for selection. 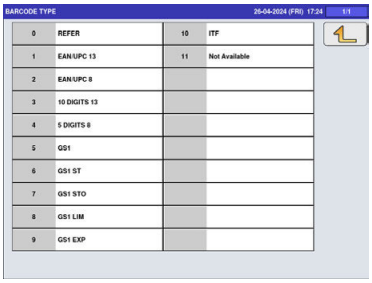

POS FORMAT (WGT)	Touch this field to display the barcode format screen and touch the desired barcode format for selection. 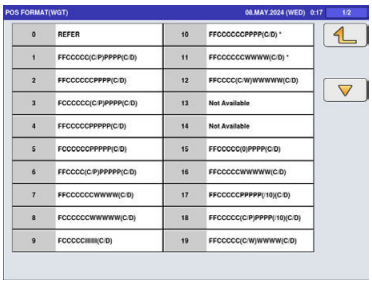 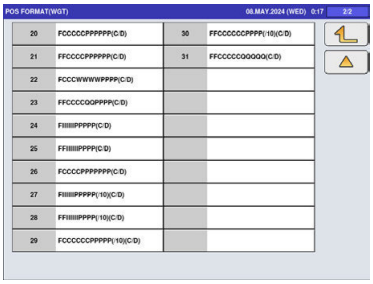
DEPARTMENT NO.	Touch this field to display the department screen. To set a department, touch the desired field on the list, or touch the “DEPARTMENT No.” field after numerical entry.
GROUP NO.	Touch this field to display the group screen. To set a group, touch the desired field on the list, or touch the “GROUP No.” field after numerical entry.

4.2.7 PLU Detail (WRAP) Registration

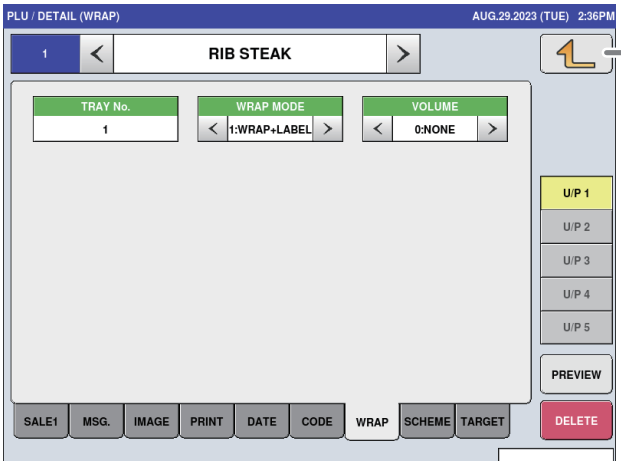

Returns to the PLU list screen.

■ How to Register Each Item

Select the desired registration item and enter the details.

Item	Descriptions
TRAY NO.	Enter the desired format number and touch this field.
WRAP MODE	Touch [<] or [>] to select the wrapping mode.
	1:Wrap + Label 2:Label 3:Wrap
VOLUME	Touch [<] or [>] to select the filling height.
	0: None 1:Low 2:Middle 3:High

4.2.8 PLU Detail (SCHEME)

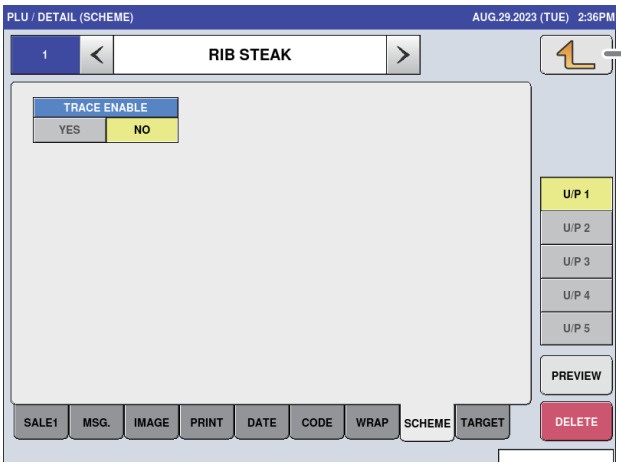

Returns to the PLU list screen.

■ How to Register Each Item

Select the desired registration item and enter the details.

Item	Descriptions
TRACE ENABLE	Touch [YES] or [NO] in this field to select whether or not to enable a traceability function.

4.2.9 PLU Detail (TARGET)

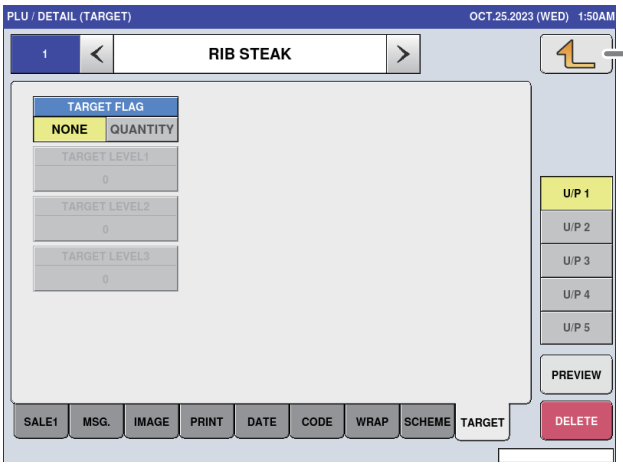

Returns to the PLU list screen.

■ How to Register Each Item

Select the desired registration item and enter the details.

Item	Descriptions
TARGET FLAG	Touch [NONE] or [QUANTITY] in this field to select whether or not to set TARGET function effective.
TARGET LEVEL 1	Enter the desired number and touch this field for the target quantity.
TARGET LEVEL 2, 3	For operating instructions, please consult your ISHIDA dealer.

4.3 CAMPAIGN REGISTRATION

This section describes how to register campaign commodities and campaign prices.

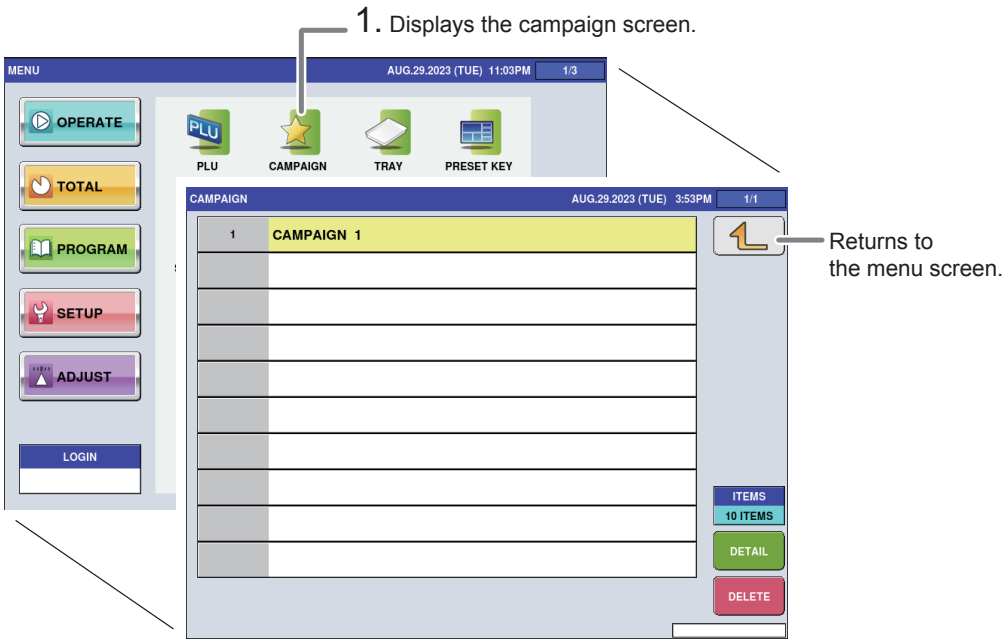

1. Touch [CAMPAIGN] on the menu screen.

The CAMPAIGN List screen will be displayed.

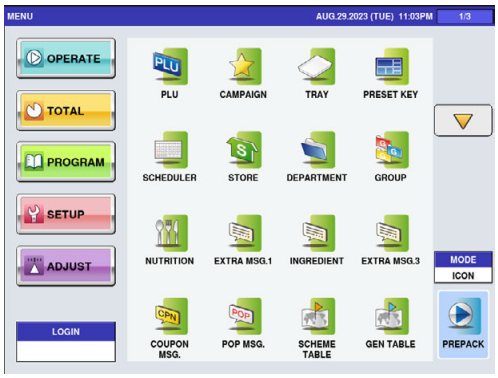

REFERENCE

To edit the registered campaign data, touch the field of the campaign data you want to edit and touch [DETAIL]. Touching [DELETE] will delete the data.

2. The campaign list screen is displayed. Enter the call number for the campaign.

Any number from 1 to 99 can be entered for the campaign number.

Example: Campaign number 1

[1] [PLU]

When the registration confirmation screen is displayed, touch [EXECUTE] to display the CAMPAIGN / DETAIL screen.

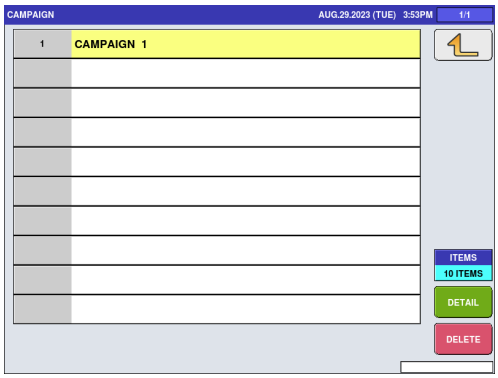

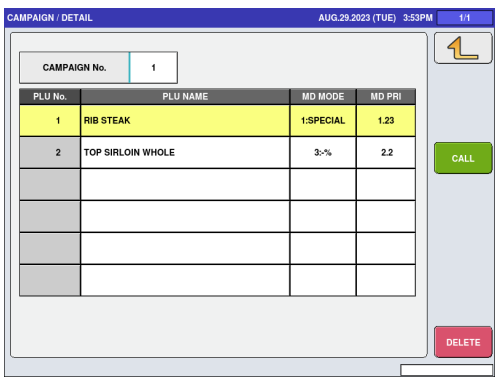

3. Select the campaign commodity.

Touch the [CALL] button to display the PLU screen and touch the required commodity.

CALL

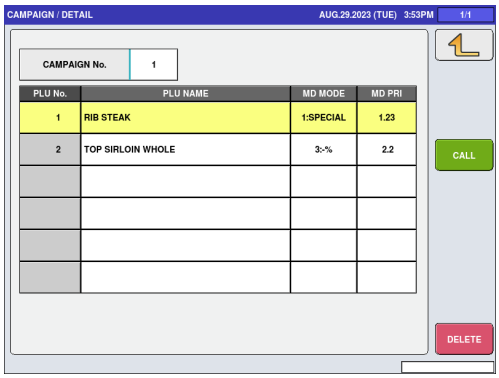

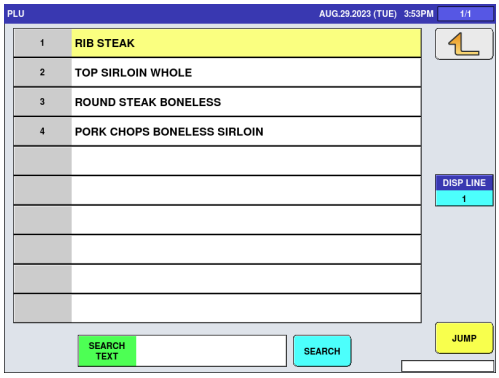

4. Select the campaign type.

Touch the [MD MODE] field to display the campaign mode list screen and select the campaign.

MD MODE

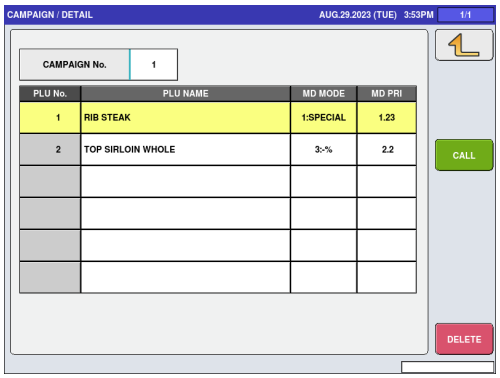

5. Register the campaign content.

Enter a numeric value and touch the [MD PRICE] field.

0 ••• 9 MD PRICE

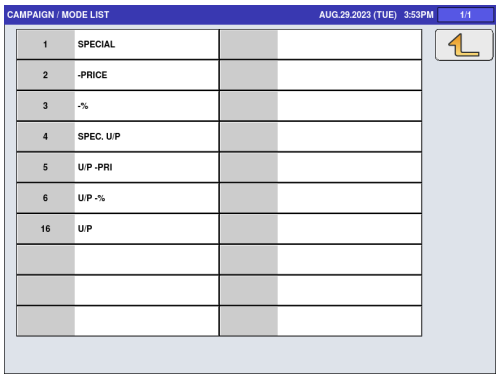

4.4 TRAY REGISTRATION

Tray sizes and tray names can be registered. The tray automatic registration screen, tray manual registration screen, film adjustment screen and labeling position registration screen are there within the tray registration screen.

4.4.1 Tray List Screen Registration

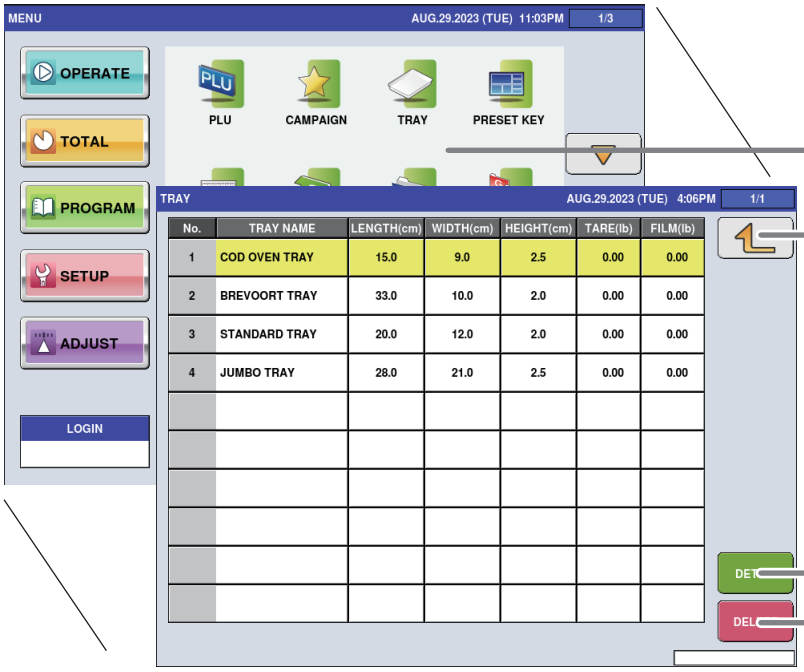

1. Displays the tray list screen.

Returns to the registration mode menu ½ screen.

Displays the detailed screen of the selected tray data.

Deletes the selected tray data.

1. Touch [TRAY] on the program mode menu 1/2 screen.

The tray list screen is displayed.

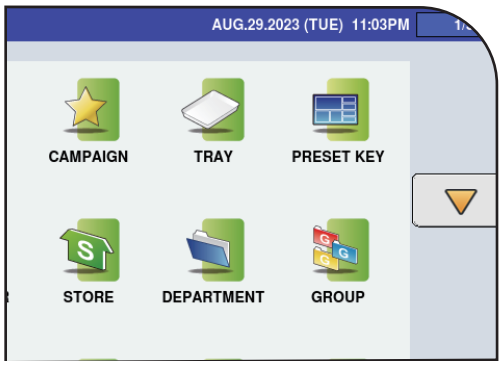

2. Enter the tray call number.

Example: Tray call number 3

3 PLU

Any number from 1 to 9999 can be entered for the storage tray call number.

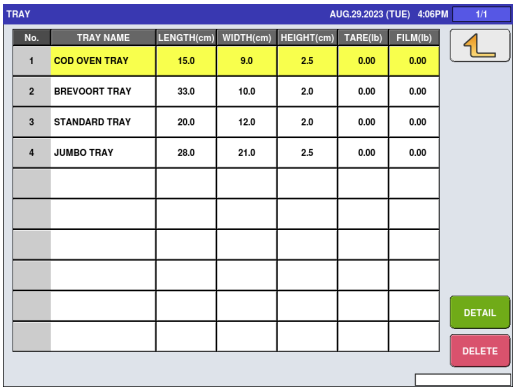

4.4.2 Manual Tray Registration

This section describes how to manually register tray information such as size, weight, and film weight.

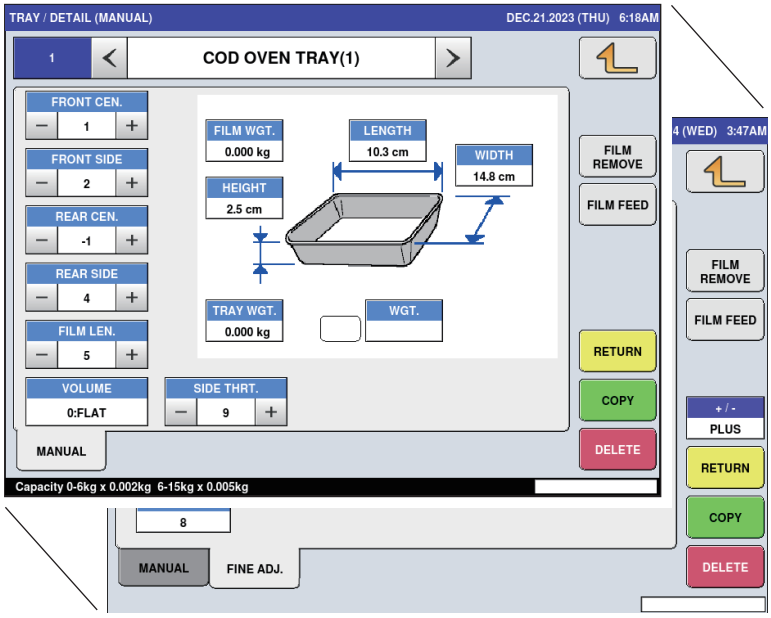

1. Touch the [MANUAL REGISTRATION] tab on the tray registration screen.

The tray (manual registration) screen is displayed.

2. Select and register the following:

- Front Center
- Front Side
- Rear Center
- Rear Side
- Film Length
- Volume
- Side Threshold

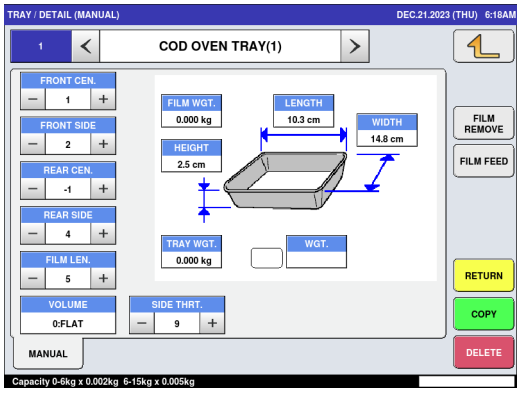

3. Measure the dimensions of the tray and enter the values.

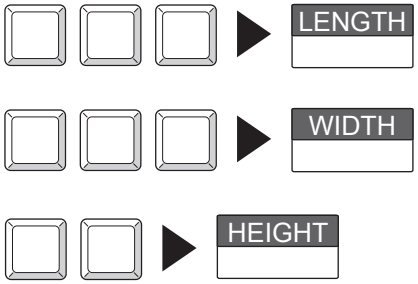

4. Make sure that nothing is placed on the weighing unit conveyor or wrapper conveyor.

CAUTION

Automatic setting of tray weight is not possible unless [WEIGHT] is touched.

5. Touch [WEIGHT].

The weighed value of the tray is registered.

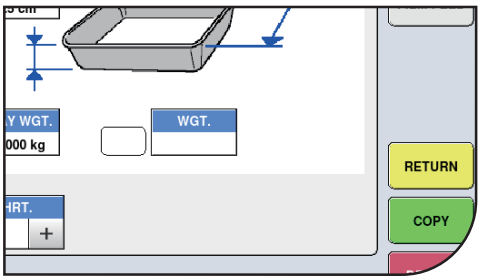

6. Place the tray to be registered in the center of the weighing platter.

Weighing of the tray is started and the weight of the tray is displayed in the WEIGHT field.

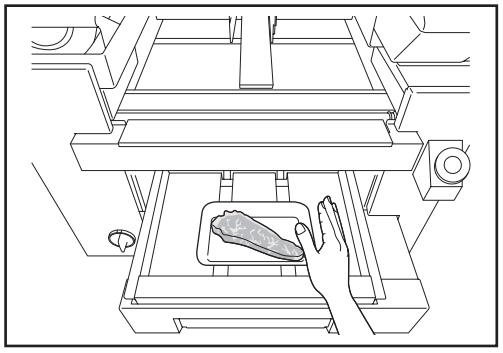

7. Touch [TRAY WEIGHT].

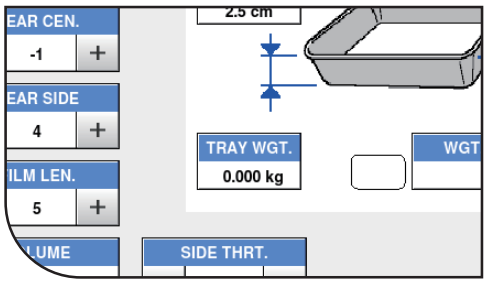

8. **Place the commodity item to be wrapped on the weighing platter.**

9. **Press the [PLU] stroke key.**

Wrapping is started and the wrapped tray is discharged.

10. **Place the discharged, wrapped tray on the weighing platter.**

Remove the film from the wrapped commodity item. → Touch [WEIGHT] on the screen. → Place the film on the weighing platter. → Touch [FILM WEIGHT] on the screen. → The calculated result of the film weight is registered.

4.4.3 Tray Name Registration

1. **Touch the tray name field on the tray registration screen to display the tray name edit screen.**

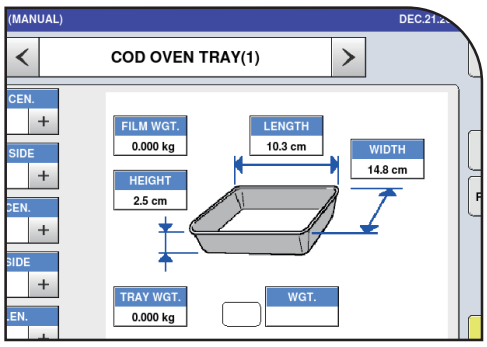

REFERENCE

For information on how to enter characters, see "Character Entry Method" on page 4-55.

2. **Enter the tray name.**

The tray name can be up to 9 characters long.

3. **Touch the Return button on the tray name edit screen.**

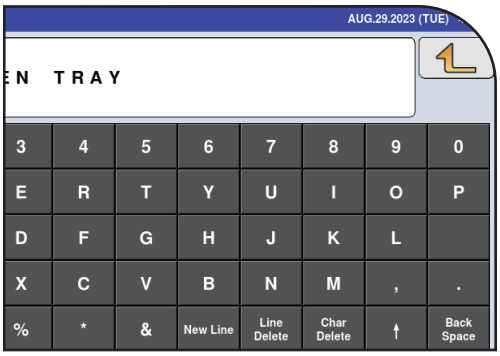

4.5 PRESET KEY REGISTRATION

This section describes how to register frequently used functions as preset keys.

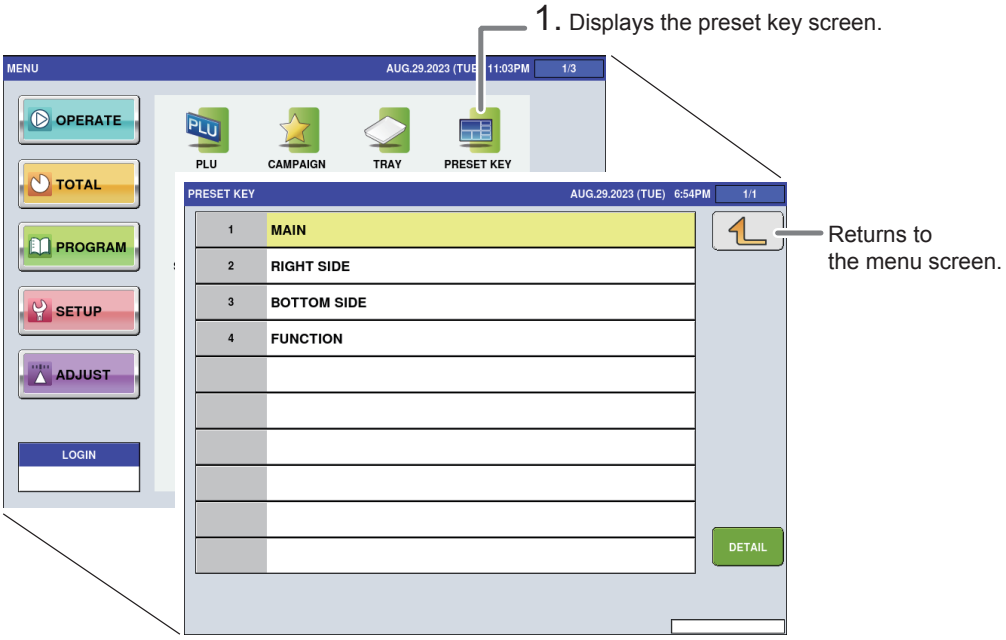

1. Touch the [PRESET KEY] on the menu screen.

The preset key screen is displayed.

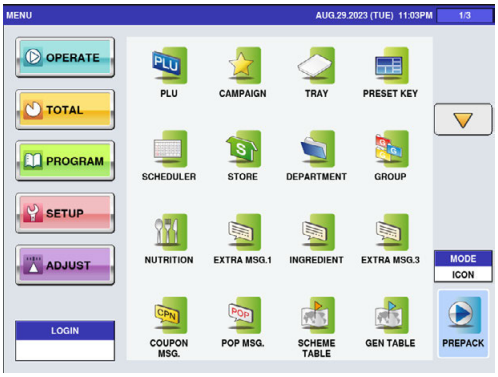

2. Touch the location where you want to register the preset key and touch the [DETAIL] button.

DETAIL

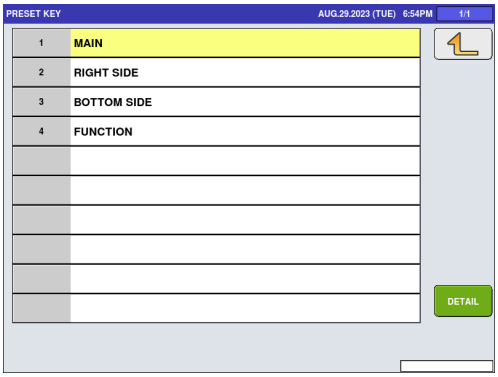

3. The preset key edit screen is displayed.

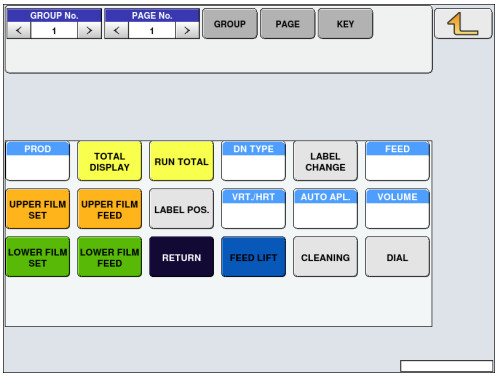

4.5.1 Setting Preset Groups and Pages

1. **Touch [<] or [>] to select the group or page number.**

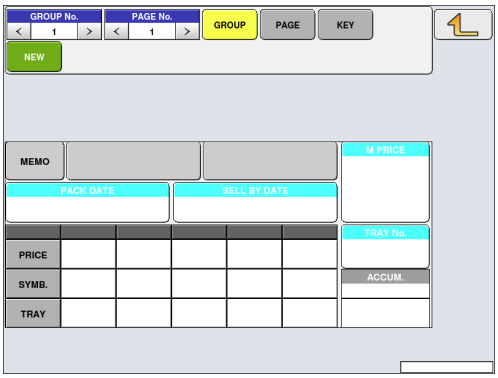

2. **To create or delete the group or the page, touch the [GROUP] or [PAGE] button, and then touch the desired function button as shown below.**

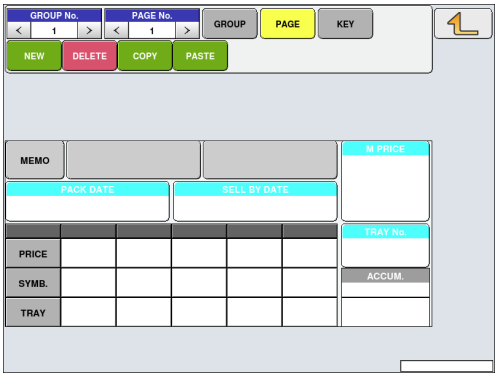

4.5.2 Setting Preset Keys

1. **Select the group and page to which you want to add a preset key, touch the [KEY] button, and then touch the [NEW] button.**

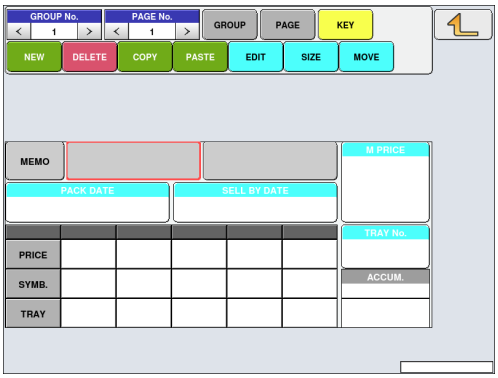

2. **Available preset keys are listed on the screen.**
To turn pages, touch [▲] or [▼].
Touch the desired function for selection.

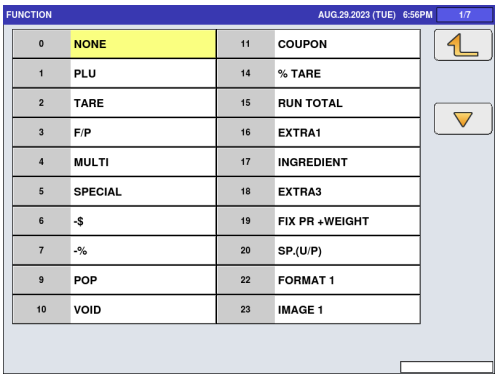

3. **The selected preset key has been assigned.**

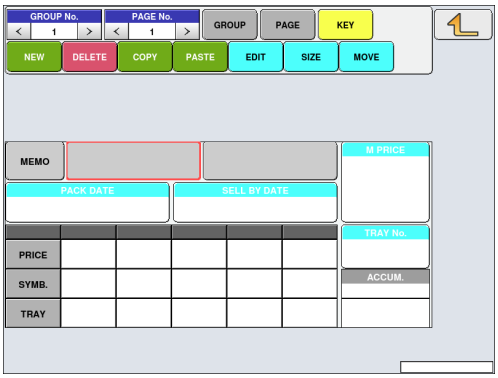

4.5.3 Changing Preset Key Sizes and Positions

1. **Select the group and page with the preset key you want to edit, touch the [KEY] key, and then touch the desired preset key.**

KEY [ ] SIZE

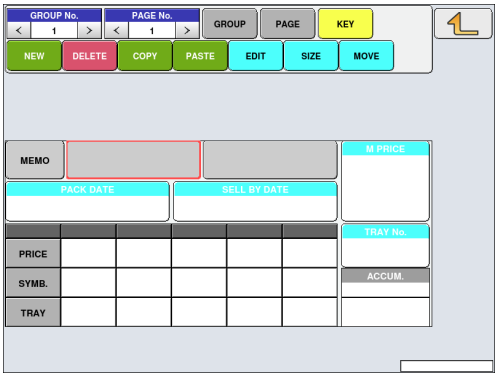

2. **Touch either the [SIZE] or [MOVE] button. Set the desired key size and location using the arrow buttons or enter a numerical value directly and touch the desired field.**

SIZE

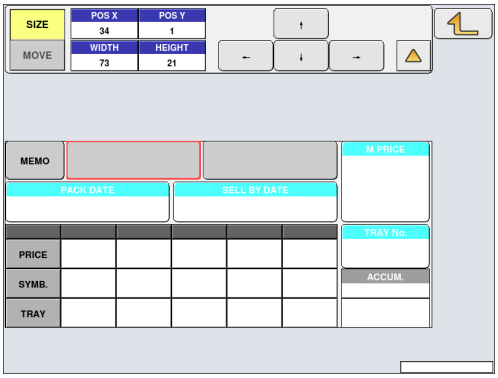

4.5.4 Editing Preset Keys

1. Select the group and page where the preset key you want to edit is located.

Then touch the [KEY] button, the preset key, and the [EDIT] button.

KEY | | EDIT

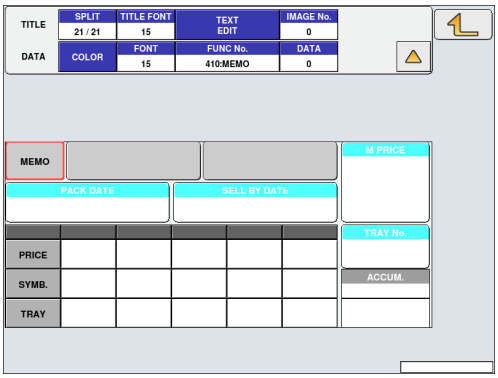

2. Enter a numerical value and touch the [SPLIT] field to split the preset key display into two portions.

0 ••• 9 | SPLIT

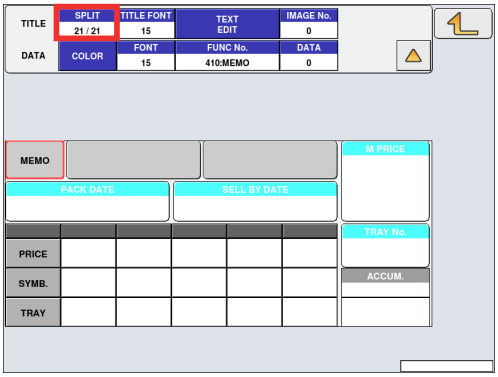

3. To change the font size, enter a numerical value and touch either the [TITLE FONT] or [FONT] field.

0 ••• 9 | TITLE FONT

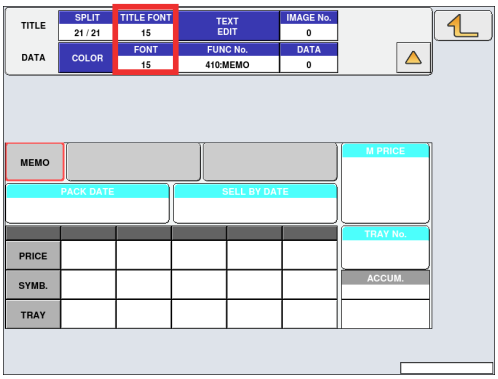

4. To change the preset key title, touch the [TEXT EDIT] field.

TEXT EDIT

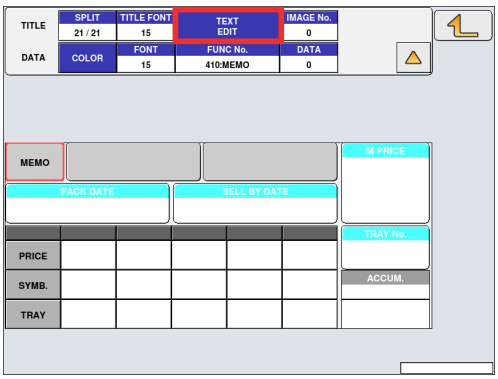

5. To assign the desired image to the preset key, touch the [IMAGE No.] field.

The preset key/image screen is displayed. Touch the desired image for selection.

IMAGE No.

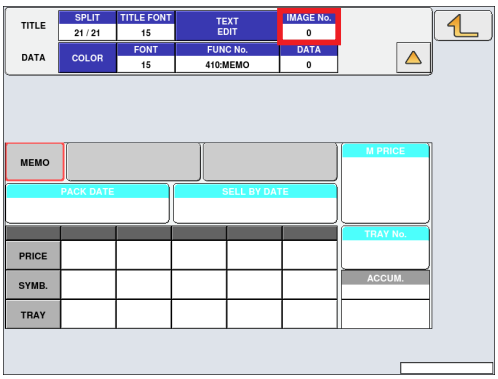

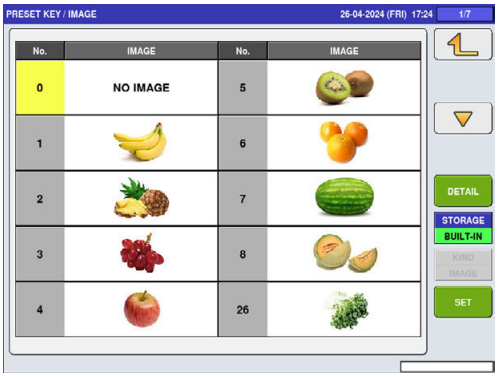

6. To change the color of the preset key, touch the [COLOR] button.

To change the background color, touch either the “UPPER BACKGROUND” or “LOWER BACKGROUND” field. To change the font color, touch the “UPPER TEXT” or “LOWER TEXT” field.

COLOR UPPER BACKGROUND

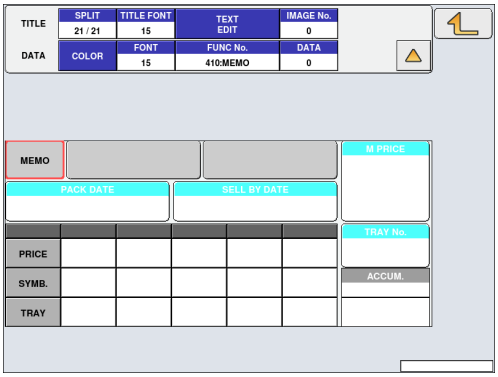

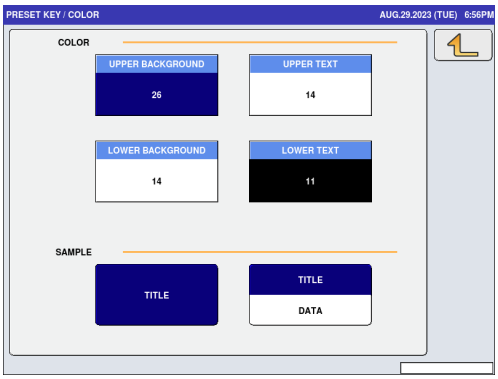

7. Touch the desired color for selection.

8. **To change the preset key operation, touch the “FUNC No.” field.**

Available functions are listed on the screen. Touch the desired function for selection.

FUNC No.

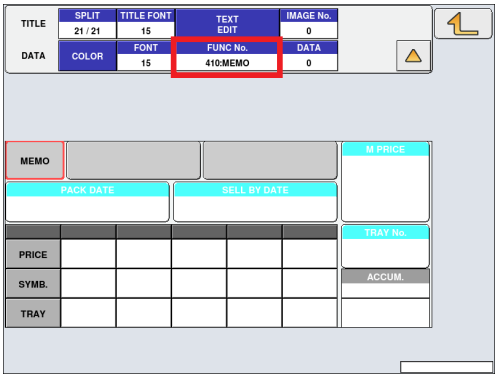

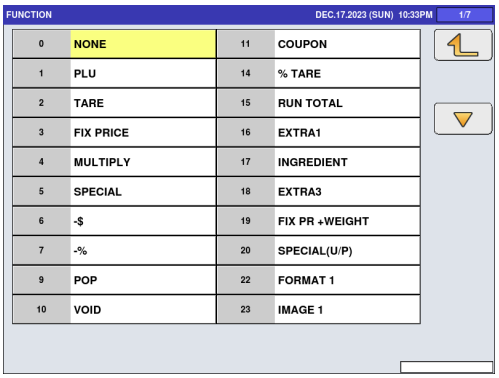

9. **To change the item number called up by the preset key, touch the “DATA” field.**

The PLU screen is displayed. Touch the desired field for selection.

DATA

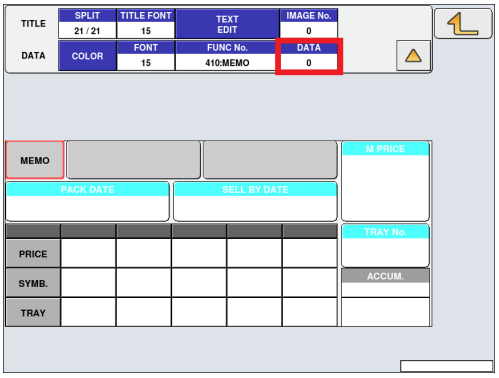

4.5.5 Deleting Preset Keys

1. **Select the group and page where the preset key you want to delete is located.**

Then touch the [KEY] button, the preset key, and the [DELETE] button.

KEY DELETE

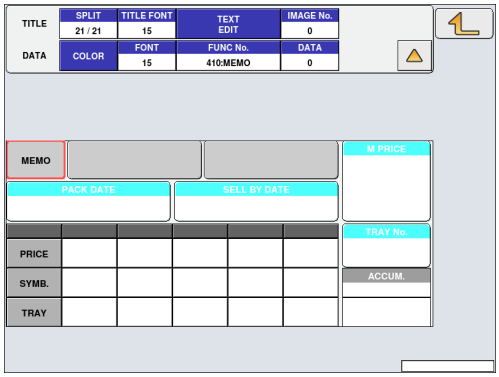

4.6 SCHEDULE REGISTRATION

This section describes how to register schedule.

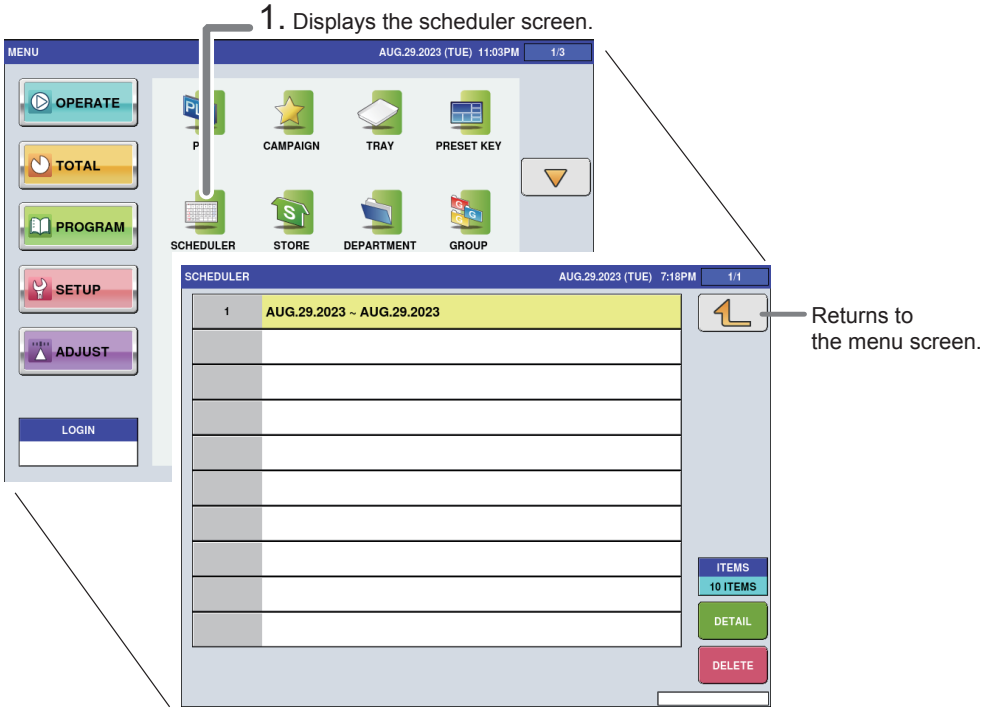

1. Touch [SCHEDULE] on the menu screen.

The SCHEDULER screen is displayed.

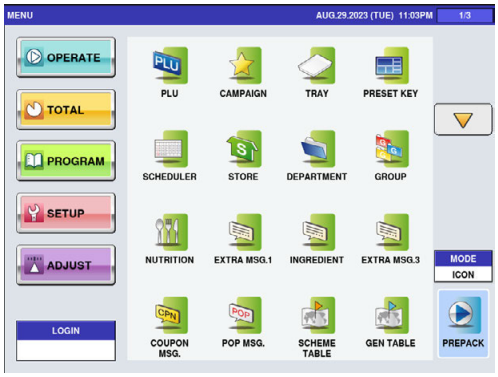

2. Enter the call number for the schedule.

Any number from 1 to 99 can be entered for the schedule number.

Example: Schedule number 1

1 PLU

When the registration confirmation screen is displayed, touch [EXECUTE].
The SCHEDULER / DETAIL screen is displayed.

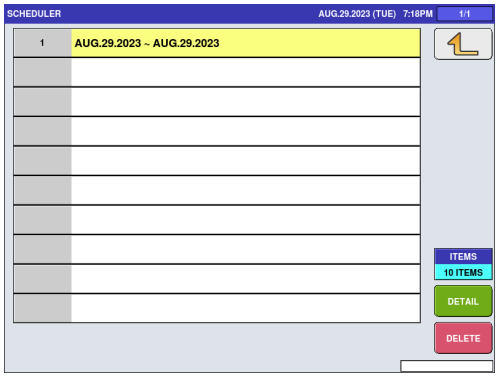

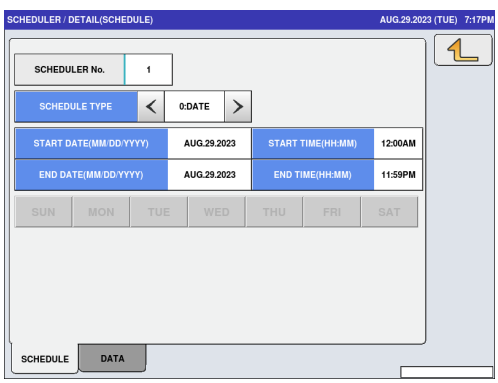

REFERENCE

To edit the registered schedule data, touch the field of the schedule data you want to edit and touch [DETAIL].
Touching [DELETE] will delete the data.

3. Select the schedule format.

0: DATE. ... Specify the start date and end date, the start time and end time.
DLY/WLY .... Specify the day of the week.

4. Enter the desired item.

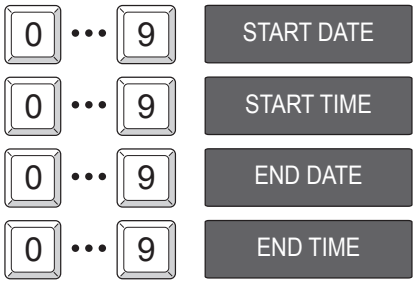

5. When [DLY / WLY] is set in the [SHEDULE TYPE] field, touch the desired day of the week for selection.

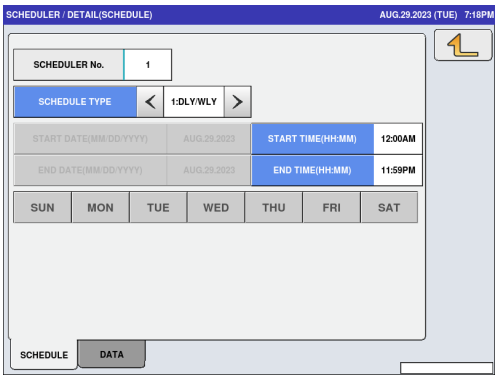

4.7 STORE REGISTRATION

This section describes how to register store names and addresses.

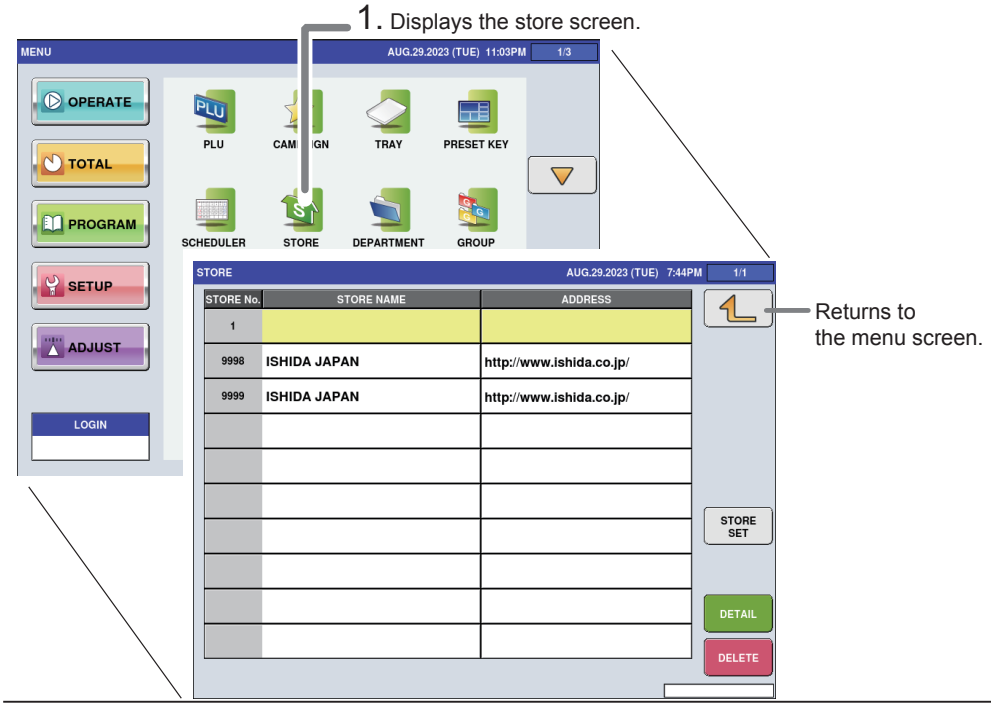

REFERENCE

To set up a multi-store operation, the settings must be changed. Please consult your ISHIDA dealer.

1. Touch [STORE] on the menu screen.

Enter the call number for the store.

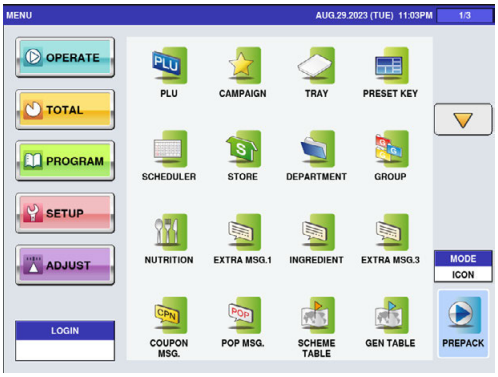

REFERENCE

To edit registered store data, touch the field of the store data you want to edit and touch [DETAIL]. Touching [DELETE] will delete the data.

2. The STORE screen is displayed.

Any number from 1 to 9999 can be entered for the store number.

Example: Store number 9998

9 9 9 8

When the registration confirmation screen is displayed, touch [EXECUTE].
The STORE / DETAIL screen is displayed.

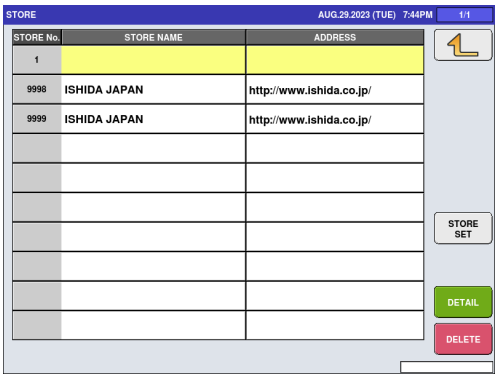

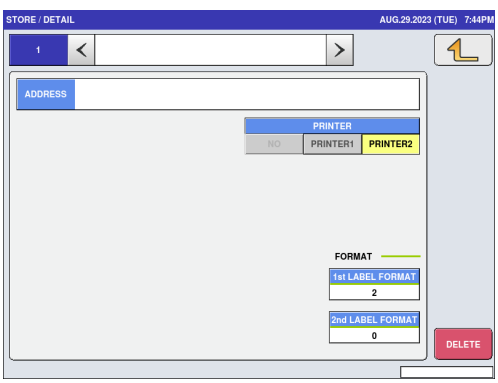

3. Enter the store name and address.

Touch the “STORE NAME” or “ADDRESS” field to display the text edit screen and enter the store name or address.

After completing the entry, touch the Return button.

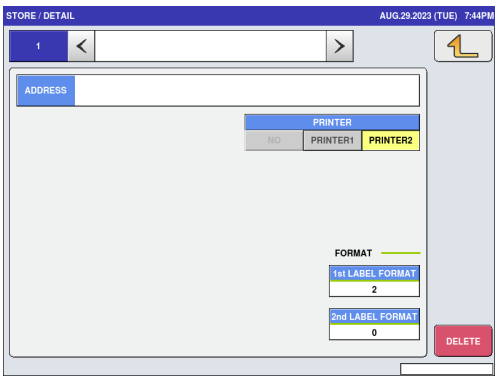

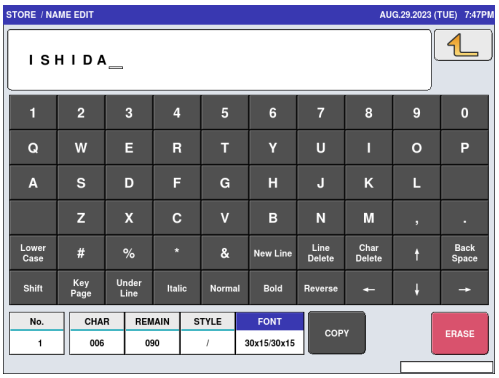

4. Set the printer.

Touch [STORE SET] to display the STORE SET screen and assign a store number to each printer.

After completing the entry, touch the Return button.

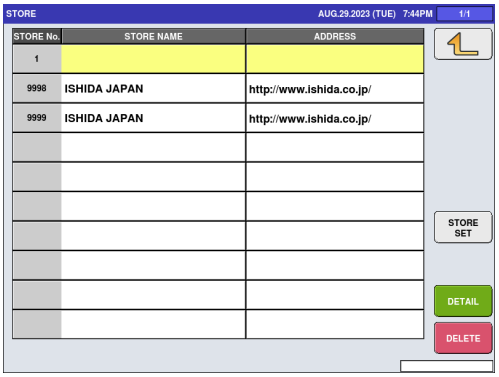

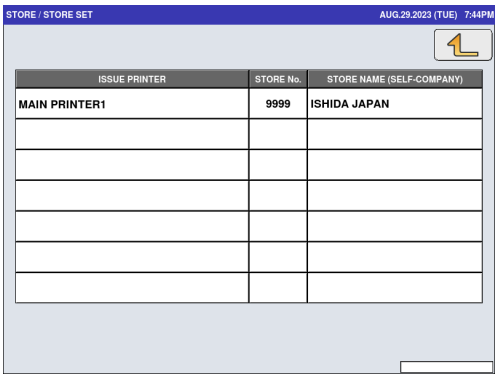

4.8 DEPARTMENT REGISTRATION

This section describes how to register departments.

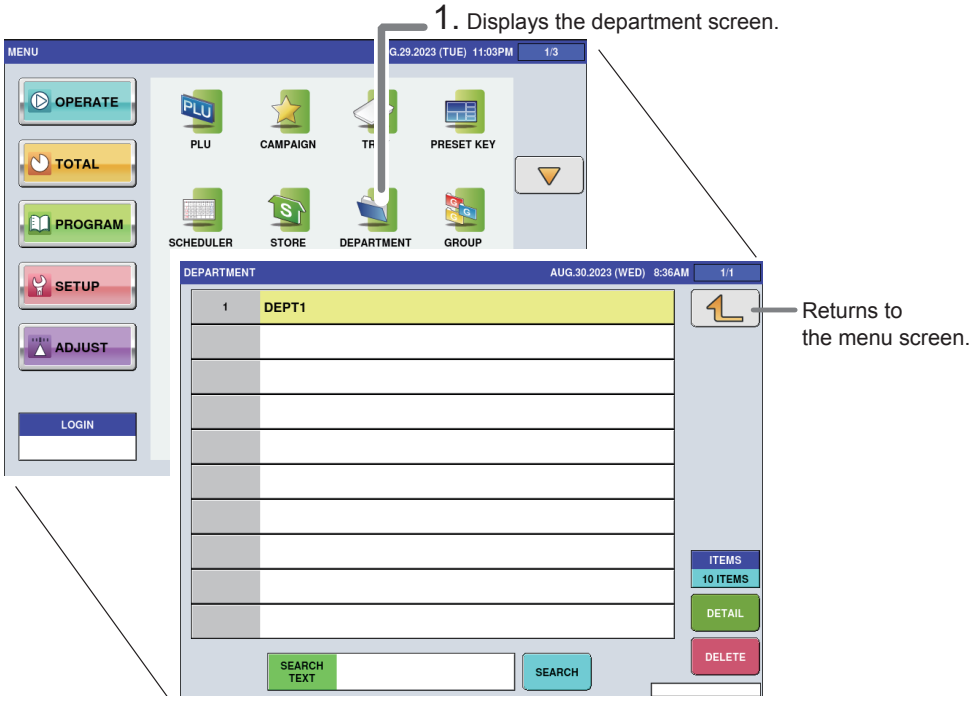

1. Touch [DEPARTMENT] on the menu screen.

The department screen is displayed.

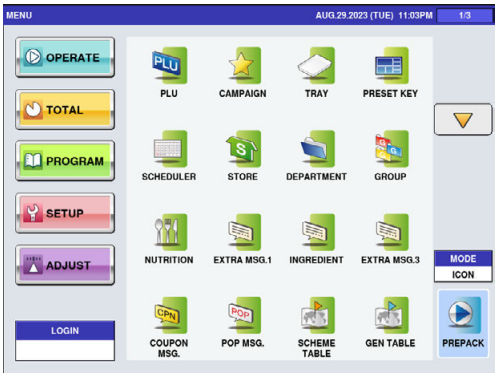

REFERENCE

To edit the registered department data, touch the field of the department data you want to edit and touch [DETAIL].
Touching [DELETE] will delete the data.

2. Enter the call number for the department.

Any number from 1 to 999999 can be entered for the department number.

Example: Department number 1

1 PLU

When the registration confirmation screen is displayed, touch [EXECUTE].
The department/edit screen is displayed.

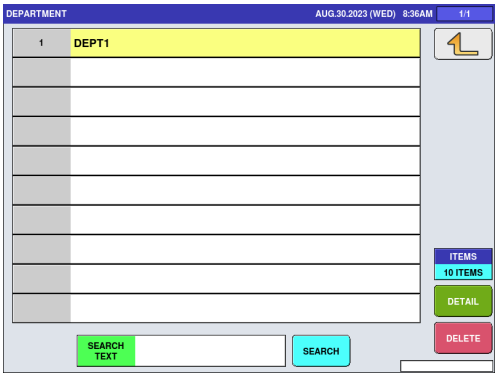

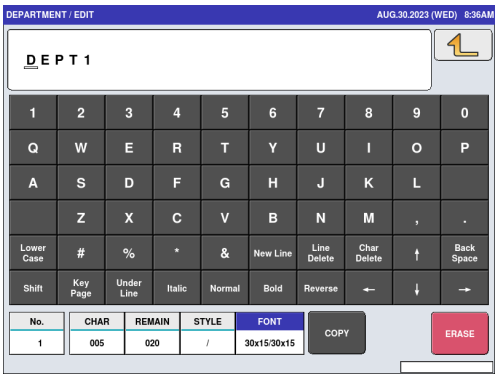

3. Enter the department name.

After completing the entry, touch the Return button.

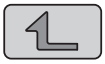

REFERENCE

The same procedure applies to both group and department.

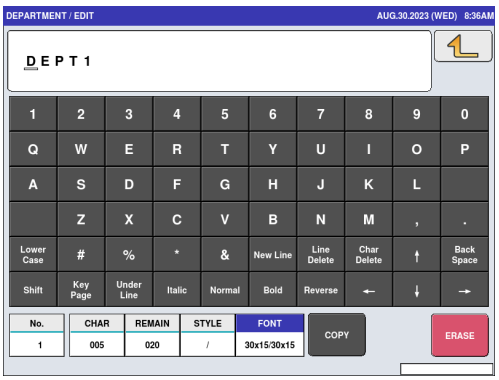

4.9 GROUP REGISTRATION

This section describes how to register the group.

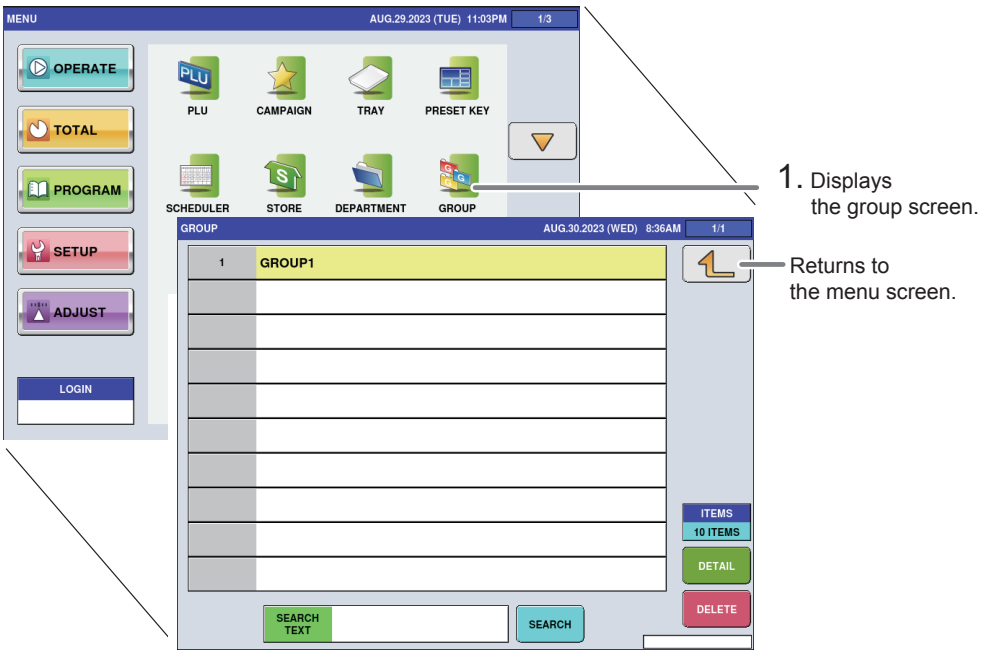

1. Touch [GROUP] on the menu screen.

The group list screen is displayed.

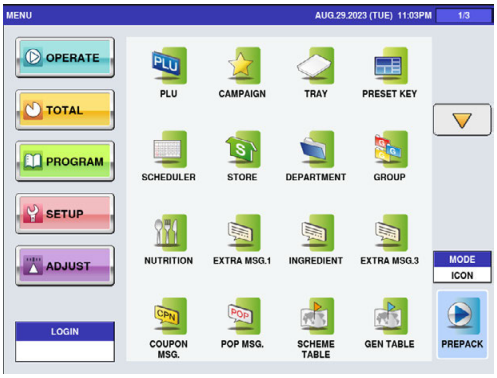

REFERENCE

To edit the registered group data, touch the field of the group data you want to edit and touch [DETAIL]. Touching [DELETE] will delete the data.

2. Enter the call number for the group.

Any number from 1 to 9999 can be entered for the group number.

Example: Group number 1

When the registration confirmation screen is displayed, touch [EXECUTE].
The group screen is displayed.

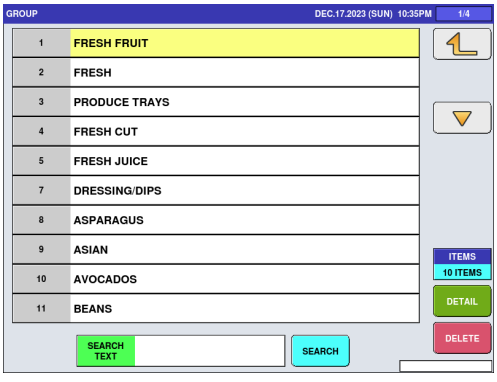

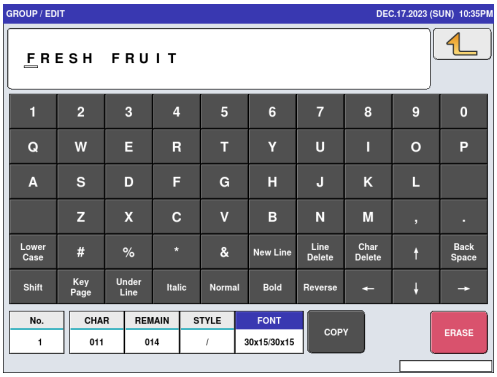

3. Enter the group name.

After completing the entry, touch the Return button.

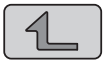

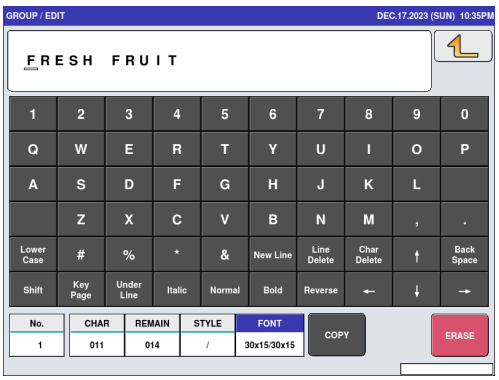

4.10 NUTRITION REGISTRATION

This section describes how to register the amount per unit and nutrition per unit-amount.

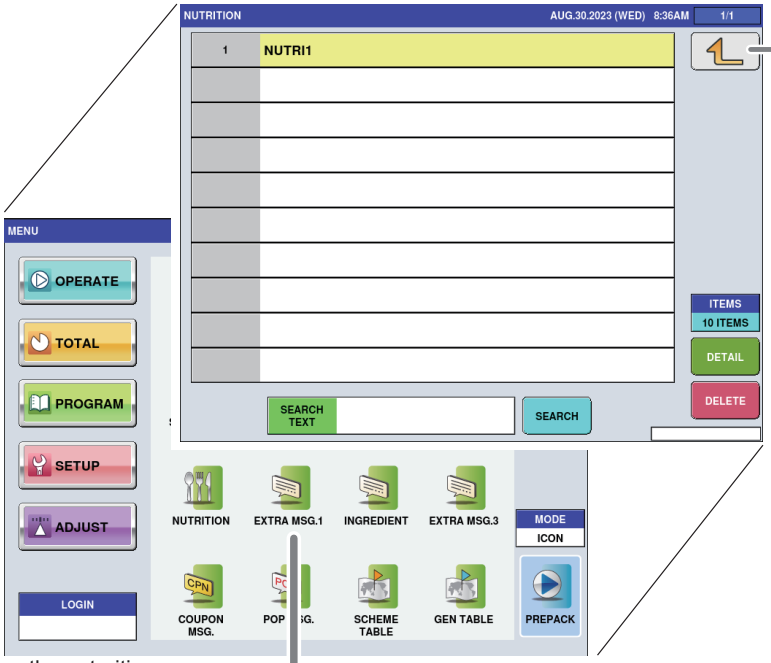

1. Displays the nutorition screen.

1. Touch [NUTRITION] on the menu screen.

The NUTRITION List screen is displayed.

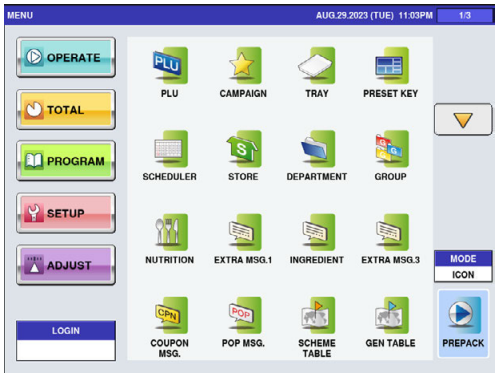

2. Enter the call number for the nutrition.

Any number from 1 to 9999 can be entered for the nutrition number.

Example: Nutrition time number 1

1 PLU

When the registration confirmation screen is displayed, touch [EXECUTE].
The NUTRITION DATA PROGRAMMING screen is displayed.

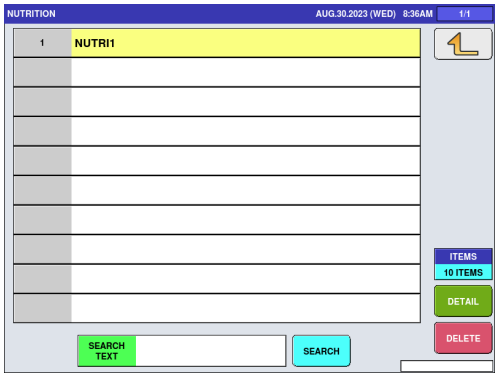

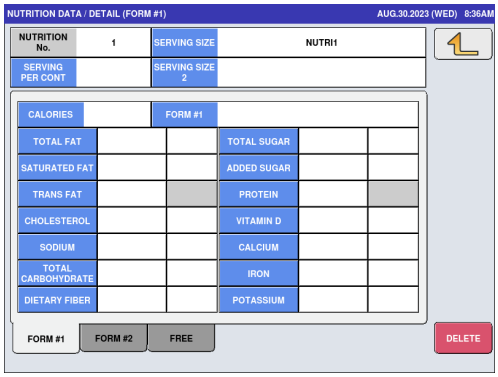

REFERENCE

To edit the registered nutrition data, touch the field of the nutrition data you want to edit and touch [DETAIL]. Touching [DELETE] will delete the data.

3. Enter the serving size.

Touch the [SERVING SIZE] and [SERVING SIZE 2] fields to display the text edit screen and enter the serving size.
After completing the entry, touch the Return button.

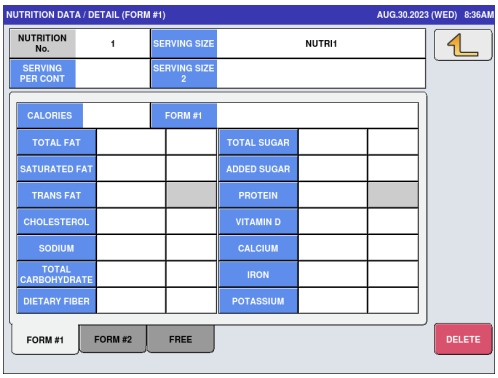

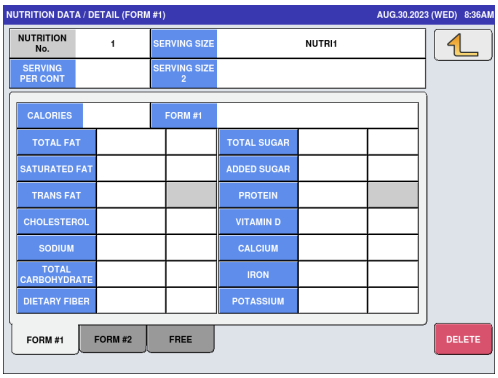

4. Touch desired item and edit the text.

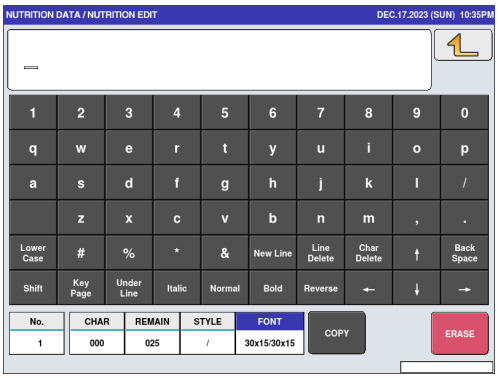

4.11 EXTRA MESSAGE REGISTRATION

This section describes how to register extra message.

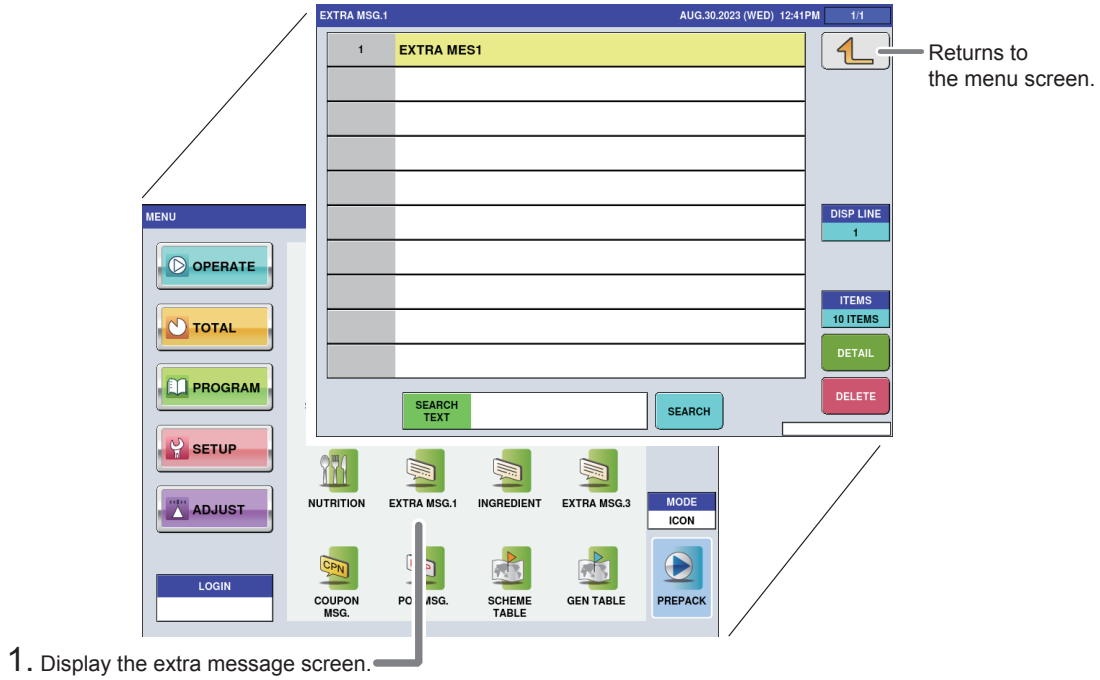

1. Touch [EXTRA MSG. 1] on the menu screen.

The EXTRA MESSAGE List screen is displayed.

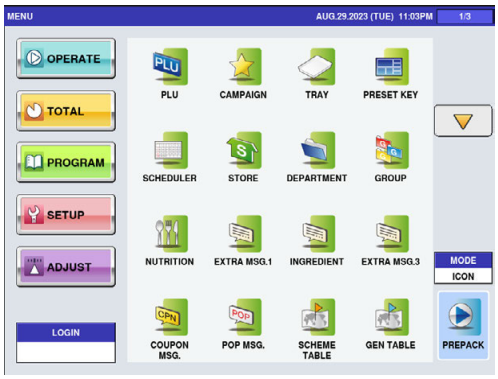

2. Enter the call number for the extra message.

Any number from 1 to 9999 can be entered for the message number.

Example: Extra message number 1

1 PLU

When the registration confirmation screen is displayed, touch [EXECUTE].
The EXTRA MESSAGE EDIT screen is displayed.

EXEC

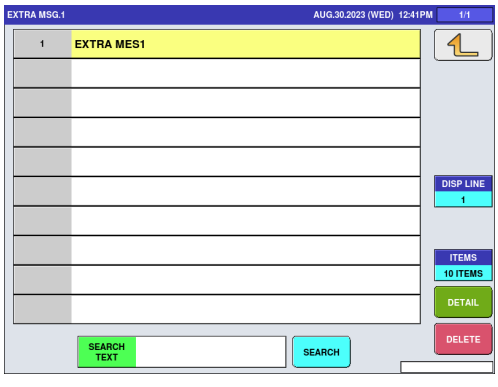

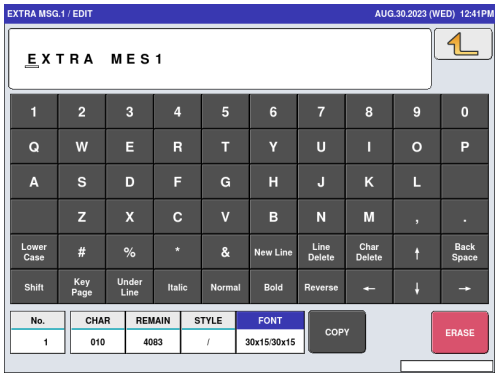

REFERENCE

To edit the registered extra message data, touch the field of the extra message data you want to edit and touch [DETAIL]. Touching [DELETE] will delete the data.

3. Enter the message.

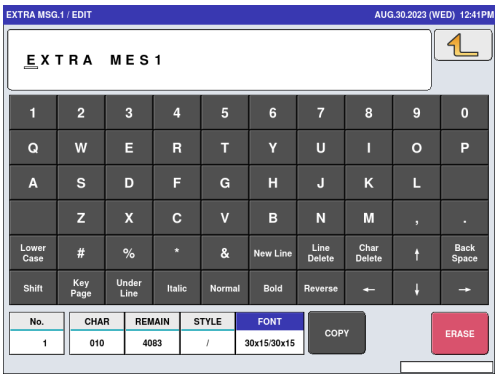

After completing the entry, touch the Return button.

REFERENCE

The same procedure applies to EXTRA MSG. 3, INGREDIENT, COUPON MSG., POP MSG., FREE MSG. 1 to 15 and EXTRA MSG. 1.

4.12 SCHEME TABLE REGISTRATION

This section describes how to register scheme tables used for traceability.

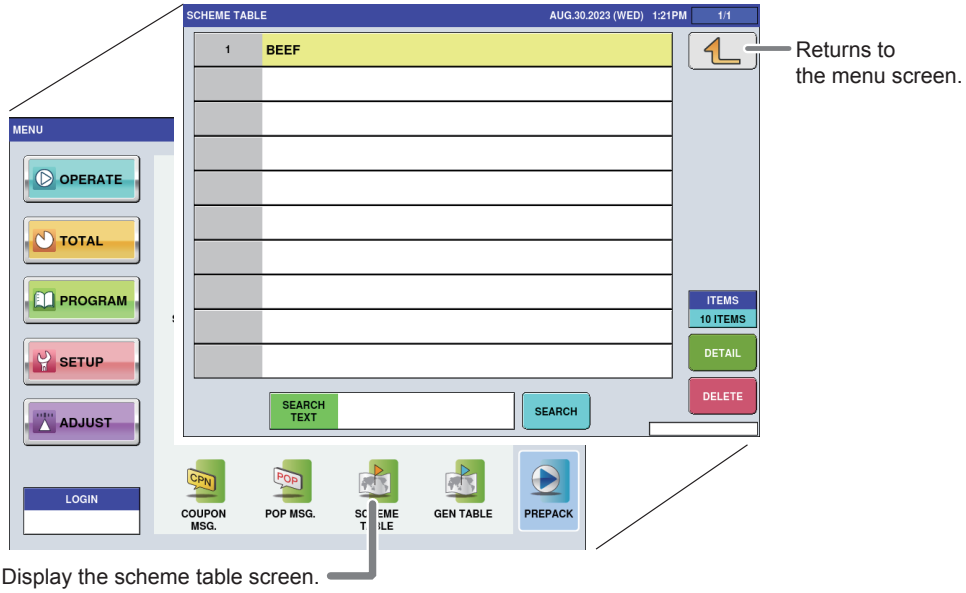

4

1. Touch [SCHEME TABLE] on the menu screen.

The SCHEME TABLE List screen is displayed.

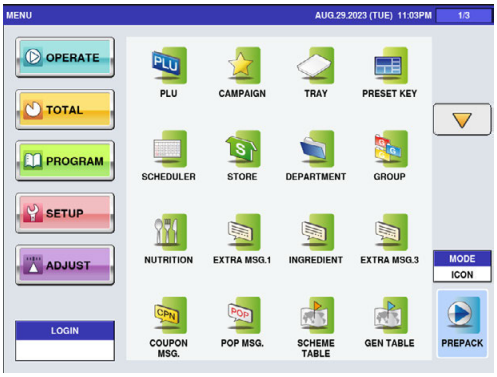

2. Enter the call number for the scheme table.

Any number from 1 to 99 can be entered for the table number.

Example: Table number 1

1 PLU

When the registration confirmation screen is displayed, touch [EXECUTE].
The SCHEME TABLE / DETAIL screen is displayed.

EXEC

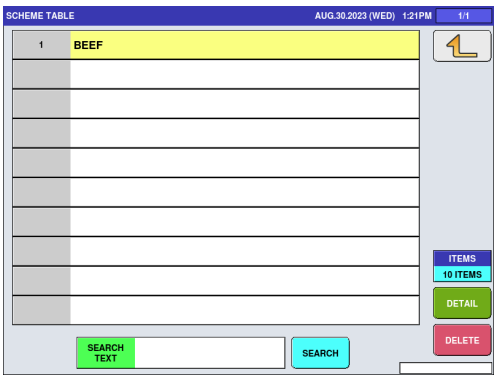

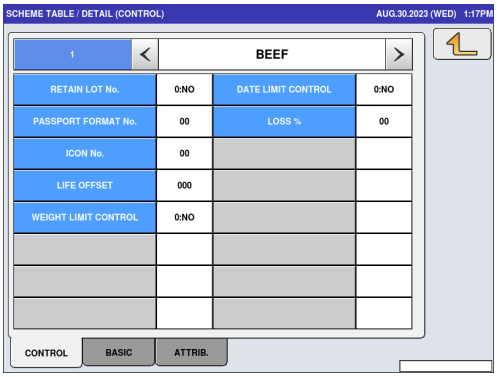

REFERENCE

To edit the registered extra message data, touch the field of the extra message data you want to edit and touch [DETAIL]. Touching [DELETE] will delete the data.

3. Enter the scheme table.

Touch the name field to display the text edit screen and enter the table name.

After completing the entry, touch the Return button.

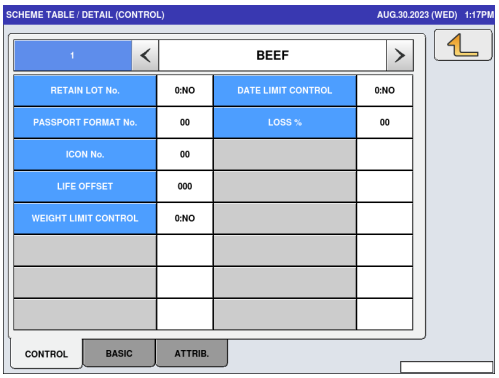

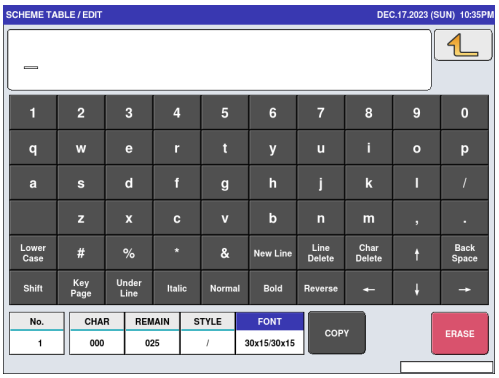

4.12.1 Scheme Table / Detail (Control) Screen Registration

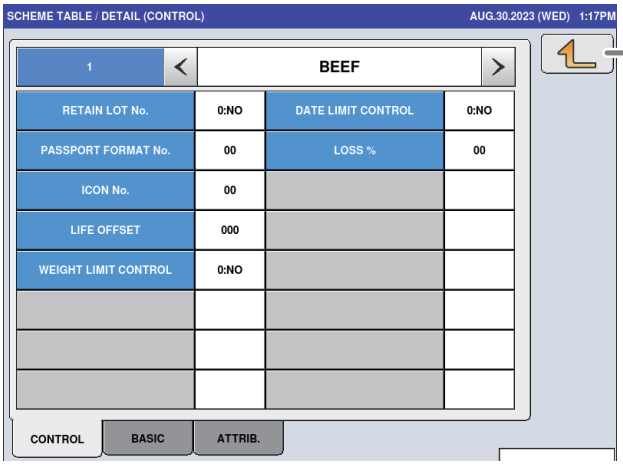

Returns to the PLU list screen.

■ How to Register Each Item

Select the desired registration item and enter the details.

Item	Descriptions
RETAIN LOT No.	Touch this field to select whether or not to use this lot number.
	0: No 1: Yes
PASSPORT FORMAT No.	Enter a numerical value and touch this field.
ICON No.	Enter a numerical value and touch this field.
LIFE OFFSET	Enter a numerical value and touch this field.
WEIGHT LIMIT CONTROL	Touch this field to select whether or not to control the weight limit.
	0: No 1: Yes
DATE LIMIT CONTROL	Touch this field to select whether or not to control the date limit.
	0: No 1: Yes
LOSS %	Enter a numerical value and touch this field

4.12.2 Scheme Table / Detail (Basic) Registration

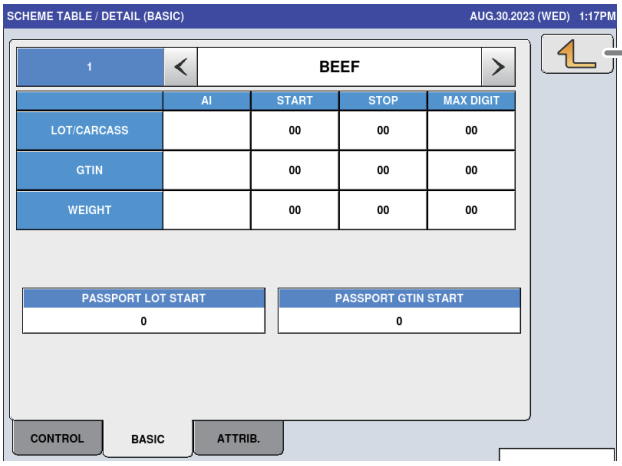

Returns to the PLU list screen.

■ How to Register Each Item

Select the desired registration item and enter the details.

Item	Descriptions
LOT/CARCASS	Enter a numerical value and touch the appropriate data field.
GTIN	Enter a numerical value and touch the appropriate data field.
WEIGHT	Enter a numerical value and touch the appropriate data field.
PASSPORT LOT START	Enter a numerical value and touch the appropriate data field.
PASSPORT GTIN START	Enter a numerical value and touch the appropriate data field.

4.12.3 Scheme Table / Detail (Attribute) Registration

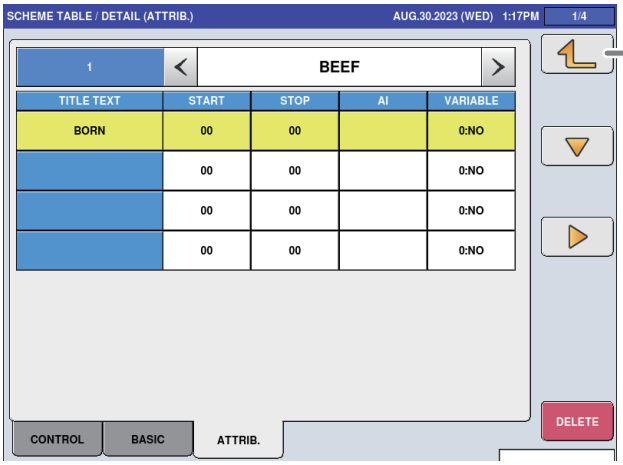

Returns to the PLU list screen.

■ How to Register Each Item

Select the desired registration item and enter the details.

ITEM	DESCRIPTIONS
TITLE TEXT	Touch the field to display the text edit screen and enter the title.
START	Enter a numerical value and touch this data field.
STOP	Enter a numerical value and touch this data field.
AI	Enter a numerical value and touch this data field.
VARIABLE	Touch this field to select whether the AI data is variable length or not.
	0: No 1: Yes
MAX DIGIT	Enter a numerical value and touch this data field.
TYPE	Touch this field to select the data type of the attribute.
	0:REF 1:MULTIPLE 2:REF+DATA 3:DATA 4:GEN
REF. DIGIT	Enter a numerical value and touch this data field.
MAX NUM	Enter a numerical value and touch this data field.
ATTR. ID	Enter a numerical value and touch this data field.
DATA TEXT	Touch the field to display the text edit screen and enter the text.
MANDATO.	Touch this field to select whether the data is a required field or not.
	0: No 1: Yes
CONDITIONAL	Touch this field to select whether the AI data is variable length or not.
	0: No 1: Yes
CR	Touch this field to select whether the AI data is variable length or not.
	0: No 1: Yes
CHAR CNT	Enter a numerical value and touch this data field.

4.13 GEN TABLE REGISTRATION

This section describes how to register GEN tables used for traceability.

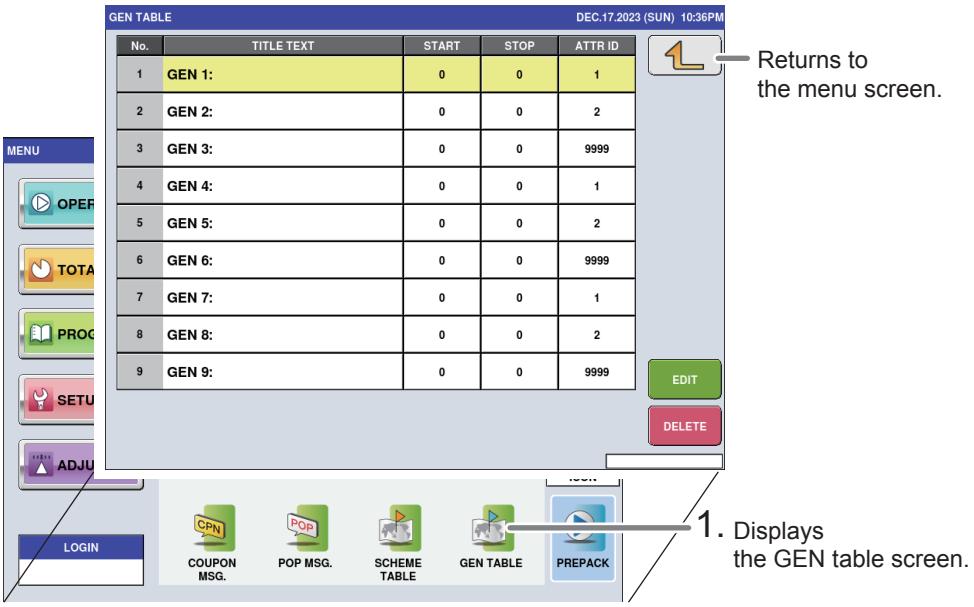

1. Touch [GEN TABLE] on the menu screen.

The GEN TABLE screen is displayed.

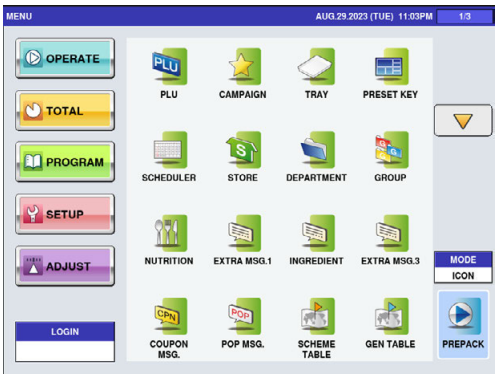

2. Enter the call number for the GEN table.

Any number from 1 to 9999 can be entered for the table number.

Example: Table number 1

1 PLU

When the registration confirmation screen is displayed, touch [EXECUTE].
The text edit screen is displayed.

EXEC

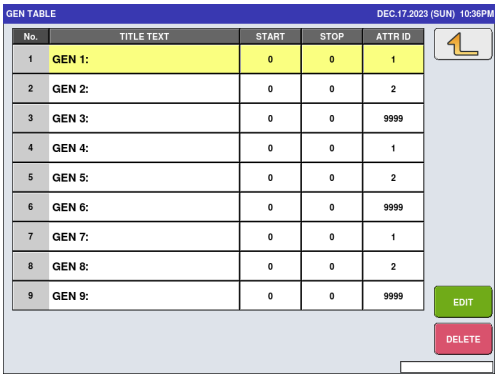

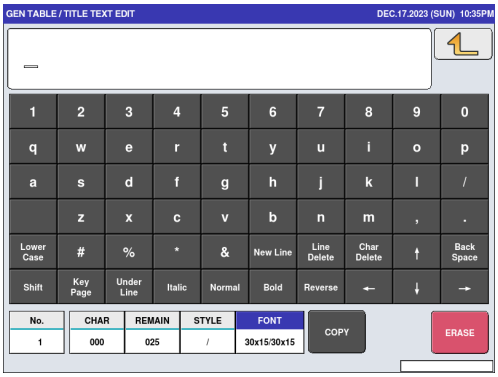

REFERENCE

To edit the registered gen table data, touch the field of the gen table data you want to edit and touch [DETAIL].
Touching [DELETE] will delete the data.

3. Enter the table name.

After completing the entry, touch the Return button.

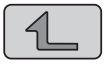

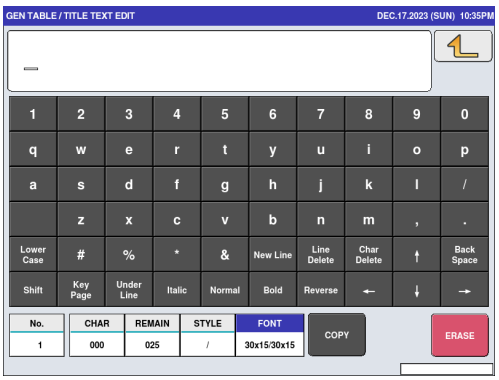

4. Enter the desired item.

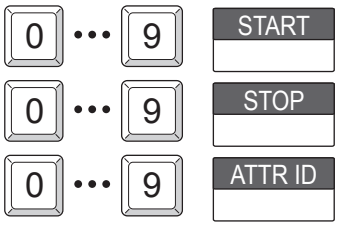

4.14 LOOKUP TABLE REGISTRATION

This section describes how to register data that can be referred to upon commodity registration such as its place of origin.

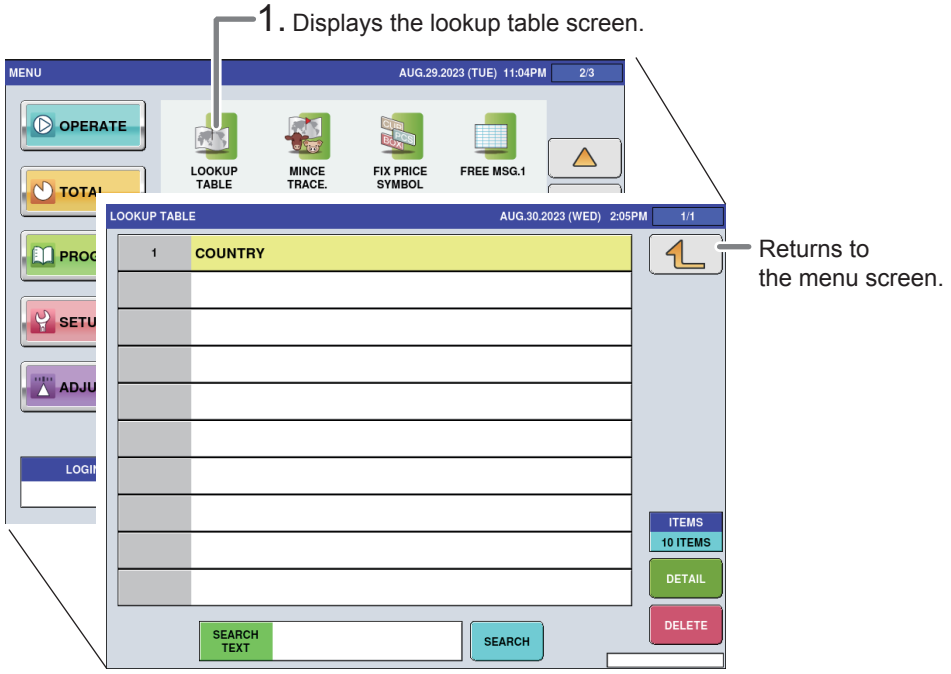

1. Touch [LOOKUP TABLE] on the menu screen.

The LOOKUP TABLE List screen is displayed.

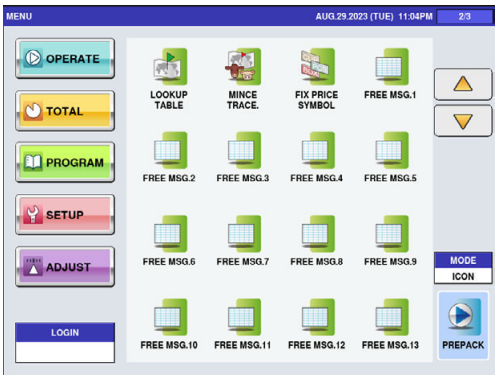

2. Enter the call number for the table.

Any number from 1 to 9999 can be entered for the table number.

Example: Table number 1

1 PLU

Touch the name field to display the text edit screen and enter the table name.
The text edit screen is displayed.

EXEC

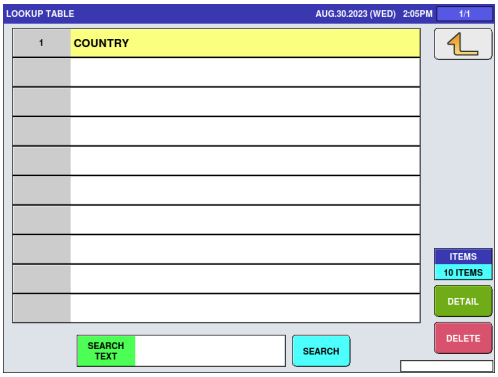

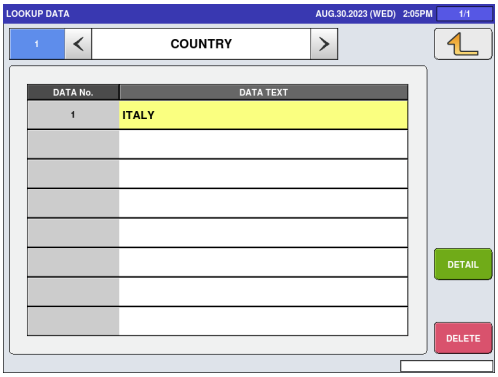

REFERENCE

To edit the registered lookup table data, touch the field of the lookup table data you want to edit and touch [DETAIL].
Touching [DELETE] will delete the data.

3. Enter the lookup table name.

Touch the name field to display the text edit screen and enter the table name.
After completing the entry, touch the Return button.

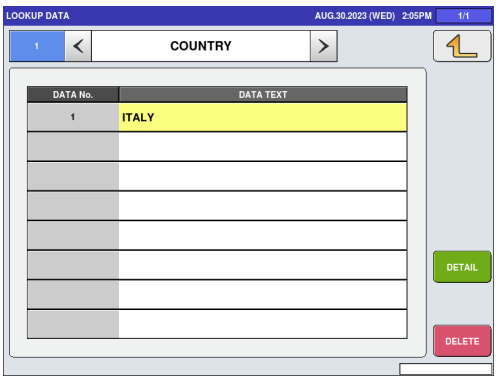

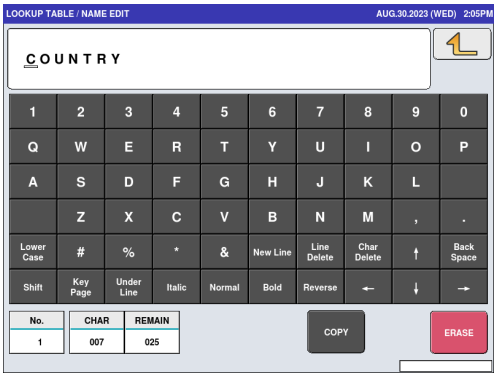

To edit the registered lookup table data, touch the field of the lookup table data you want to edit and touch [DETAIL].
Touching [DELETE] will delete the data.

4. Enter the call number for the table data.

Any number from 1 to 9999 can be entered for the table number.

Example: Table number 1

Touch the name field to display the text edit screen and enter the table name.
The text edit screen is displayed.

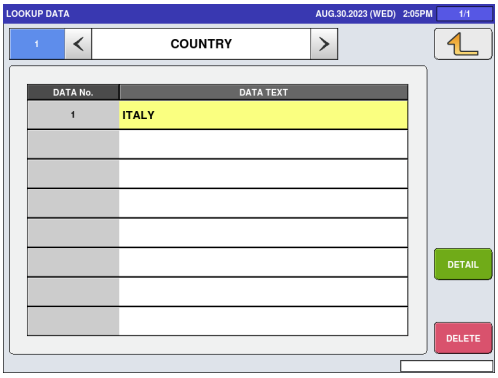

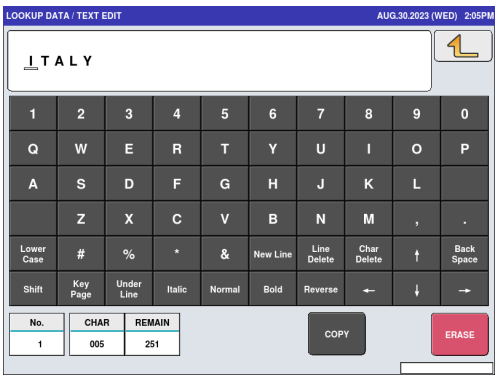

5. Enter the data name.

After completing the entry, touch the Return button.

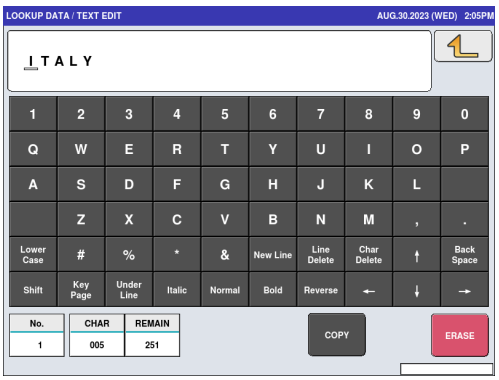

4.15 MINCE TRACE REGISTRATION

This section describes how to register information regarding the traceability of mincemeat.

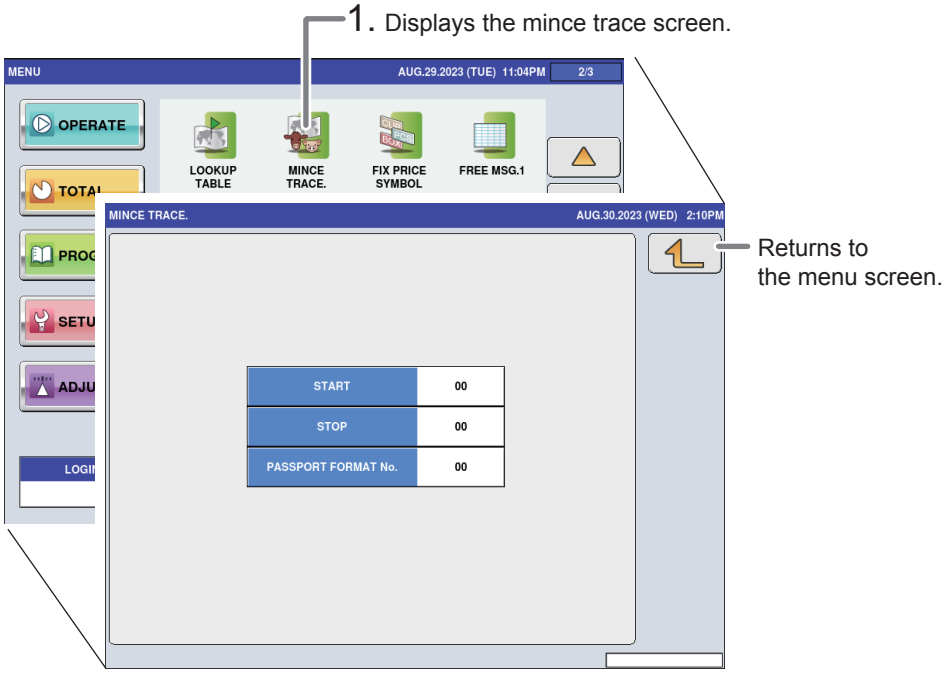

1. Touch [MINCE TRACE] on the menu screen.

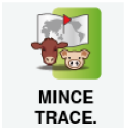

The MINCE TRACE screen is displayed.

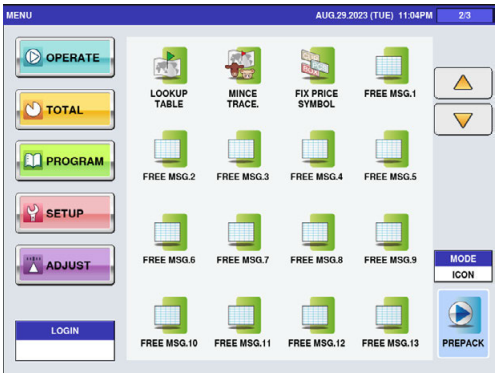

2. Register the desired items.

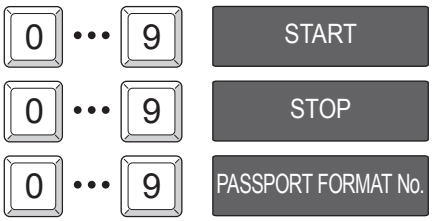

4.16 FIXED PRICE SYMBOL REGISTRATION

This section describes how to register the counting symbols for commodities.

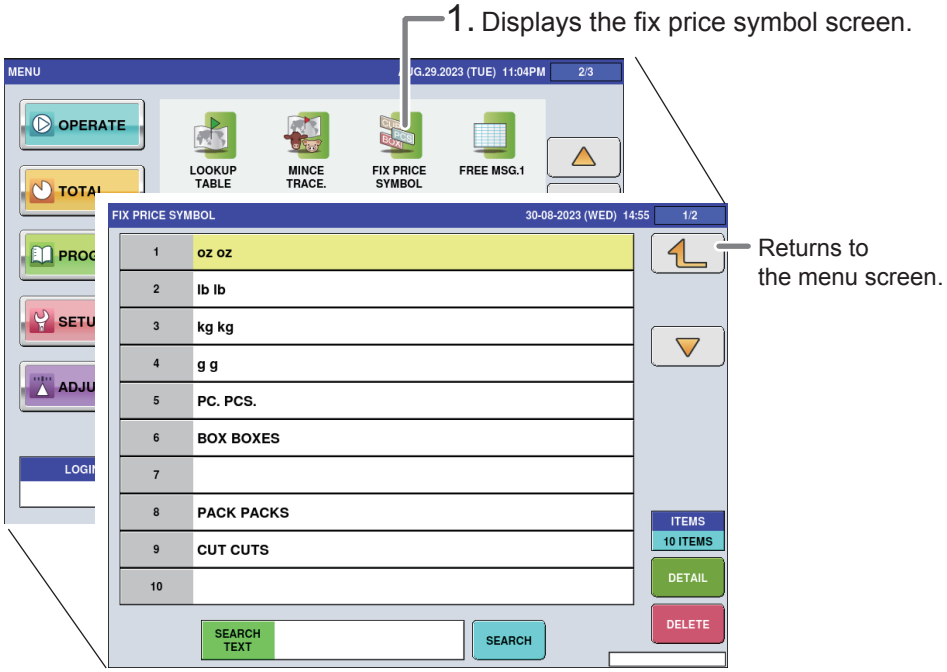

1. Touch [FIX PRICE SYMBOL] on the menu screen.

The FIX PRICE SYMBOL screen is displayed.

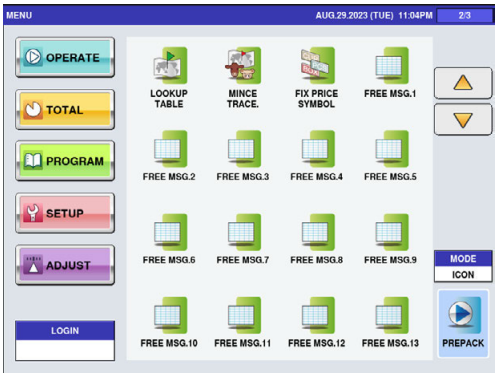

2. Enter the call number for the price symbol.

Any number from 1 to 9999 can be entered for the symbol number.

Example: Symbol number 1

1 PLU

When the registration confirmation screen is displayed, touch [EXECUTE].
The FIX PRICE SYMBOL / EDIT screen is displayed.

EXEC

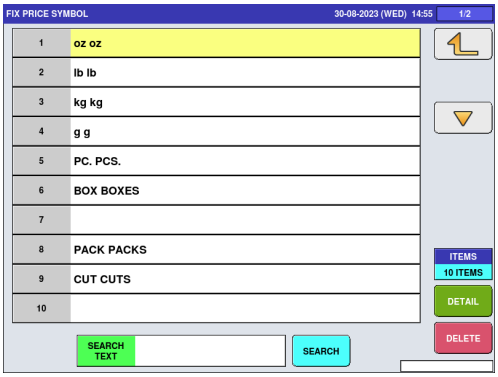

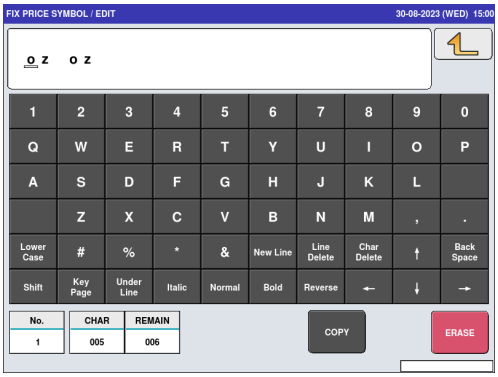

REFERENCE

To edit the registered fixed price symbol data, touch the field of the fixed price symbol data you want to edit and touch [DETAIL]. Touching [DELETE] will delete the data.

3. Enter the counting symbol.

After completing the entry, touch the Return button.

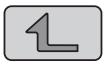

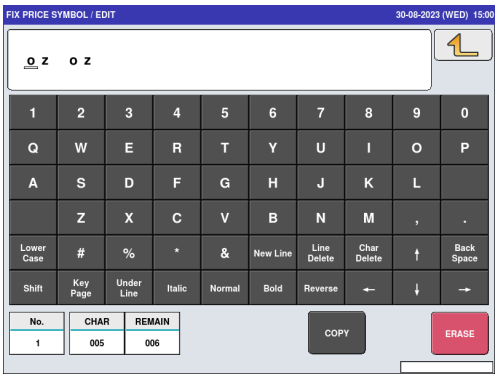

> **CAUTION** Enter the unit and its plural form separated by a space.

4.17 LABEL DATA CHECK

This section describes how to check labels through actual printing.

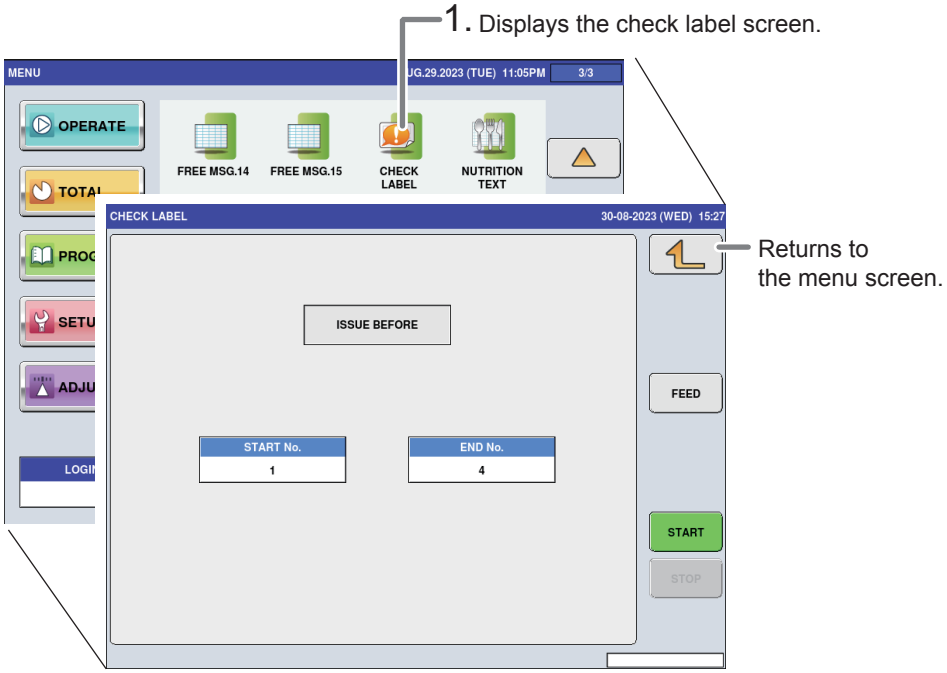

1. Touch [CHECK LABEL] on the menu screen.

The CHECK LABEL screen is displayed.

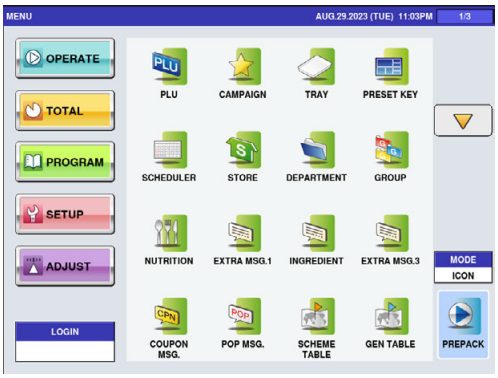

2. Enter required items.

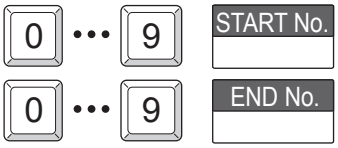

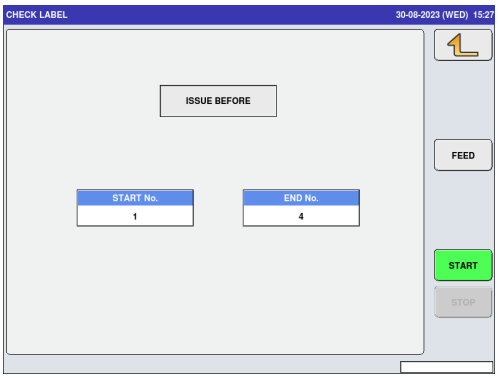

3. Touch [START] to print the label.

START

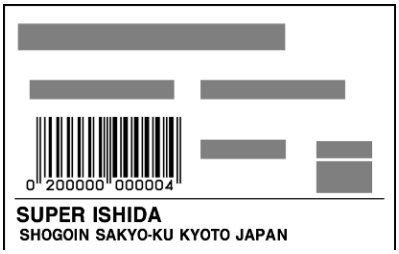

4.18 NUTRITION TEXT REGISTRATION

This section describes how to register data such as information on nutrition.

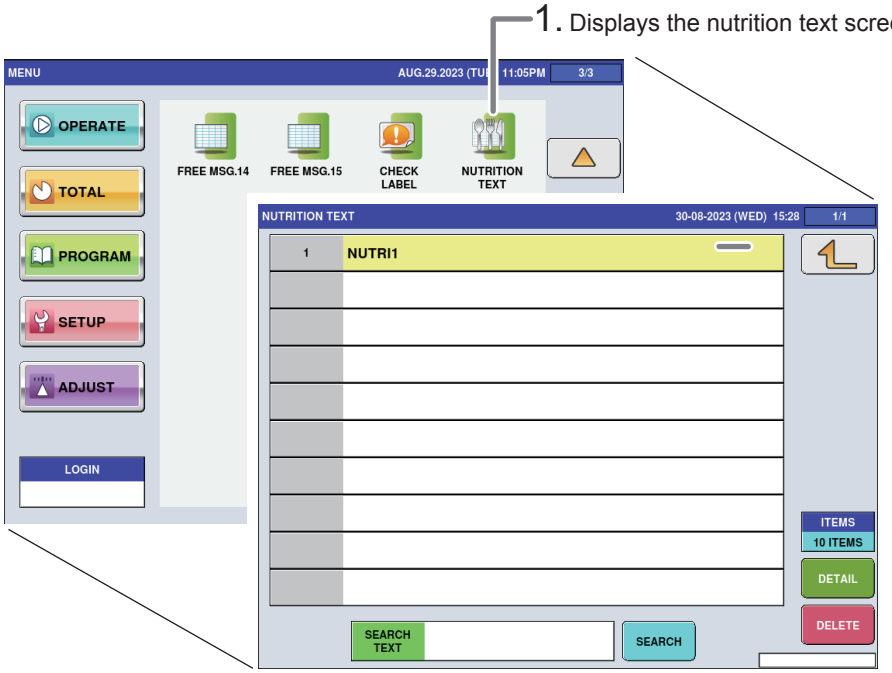

1. Touch [NUTRITION TEXT] on the menu screen.

The NUTRITION TEXT List screen is displayed.

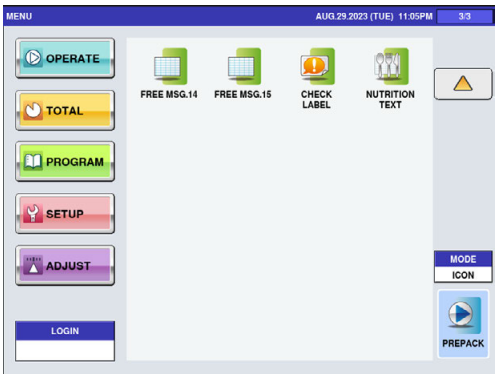

2. Enter the call number for the text.

Any number from 1 to 9999 can be entered for the text number.

Example: Text number 1

1 PLU

When the registration confirmation screen is displayed, touch [EXECUTE].
The NUTRITION TEXT / DETAIL screen is displayed.

EXEC

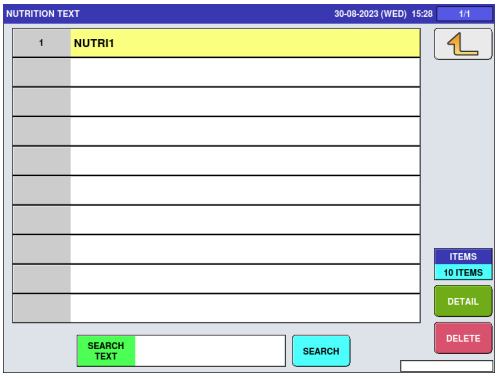

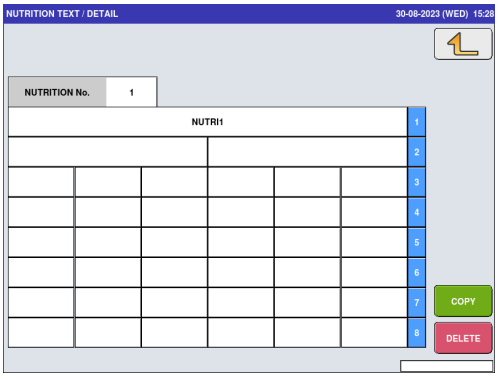

REFERENCE

To edit the registered fixed price symbol data, touch the field of the fixed price symbol data you want to edit and touch [DETAIL]. Touching [DELETE] will delete the data.

3. Enter the desired item.

Touch the desired field to display the text edit screen and enter the content.
After completing the entry, touch the Return button.

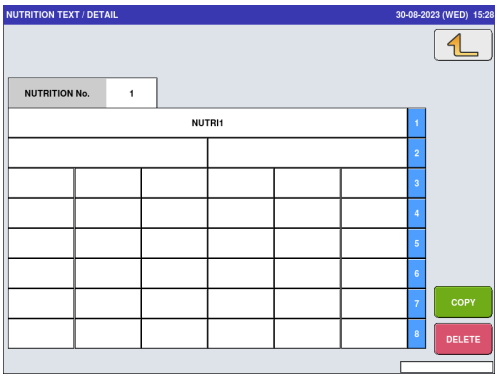

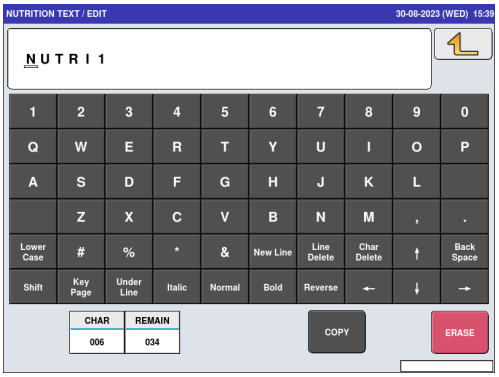

4.19 CHARACTER ENTRY METHOD

This section describes the procedure for entering characters, using the extra message function as an example. (The character entry screen is the same for each function, but some keys cannot be used for certain applications)

Upper-case mode

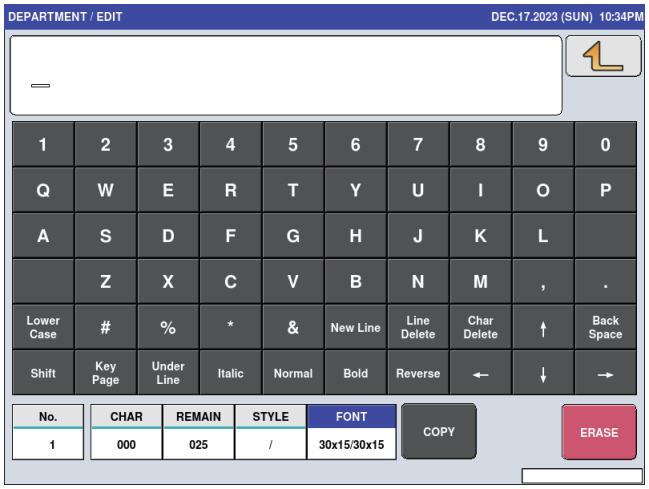

Lower-case mode

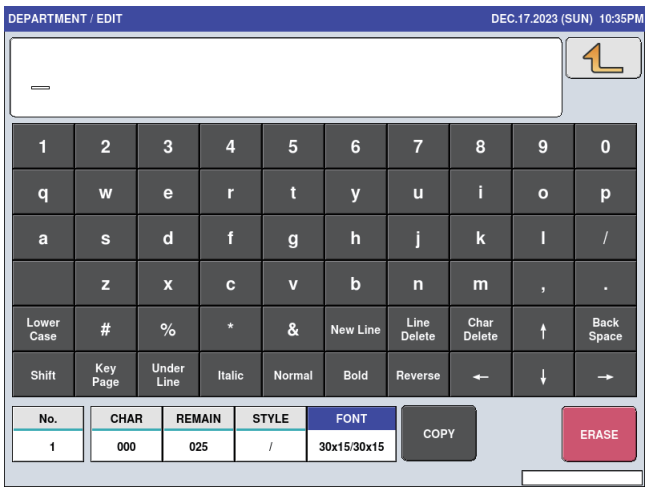

■ Edit Keys

Lower Case	Switches character modes
New Line	Begins a new line.
Line Delete	Deletes the text on the line where the cursor is placed.
Char Delete	Used to delete a character at the place where the cursor is placed.
Back Space	Moves the cursor back one character and deletes the character.
Under Line	Specifies the underlined character font style.

Normal	Specifies the bold font style.
Reverse	Specifies the reverse character font style.
Bold	Specifies the bold character font style.
→	Moves the cursor to the right.
←	Moves the cursor to the left.
↑	Moves the cursor up.

Italic	Specifies the Italic character style.	↓	Moves the cursor down. Also selects characters to change the style.
COPY	Copies the original data to the current data.		Enters a space.
ERASE	Erases the entire text currently being called.		
Key Page	Displays the following key screen. 		
Shift	Displays the following key screen. 		

4.19.1 Text Editing

1. Enter the desired characters using the alphanumeric keys.

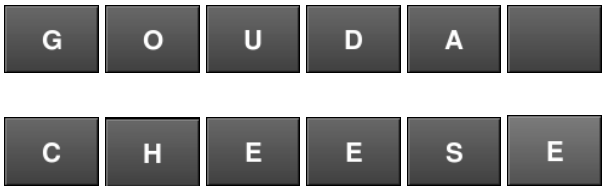

Upper-case characters

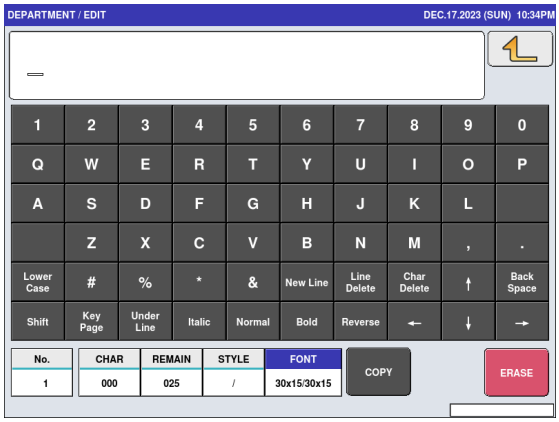

2. To begin a new line, touch the [New Line] key.

Enter the desired characters.

3. To register the editing, touch the Return button.

4.19.2 Font Style Selection

1. **Touch the following keys to select the desired font style.**

Note: The selected font style is displayed in the “STYLE” display field.

2. **Enter the desired characters using the alphanumeric keys.**

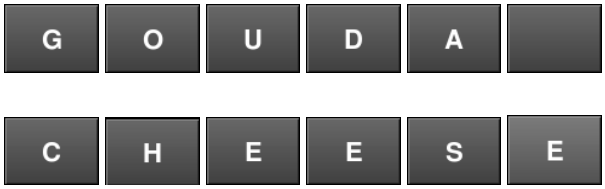

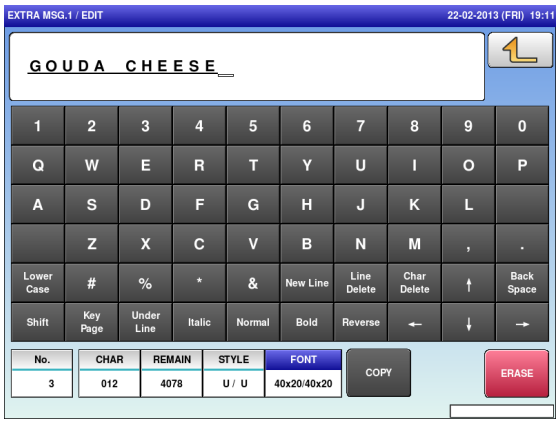

3. **Touch the Return key to register the edited content.**

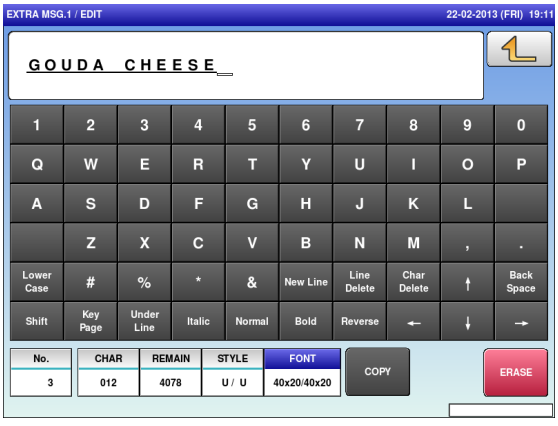

4.19.3 Line Data Deletion

1. **Touch the [Line Delete] key to delete the line data. The line data has been deleted.**

Line Delete

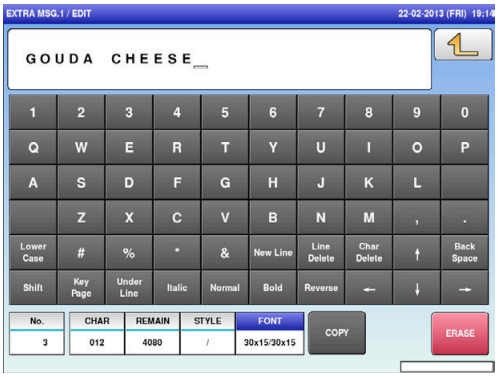

2. **Touch the Return button to register the deletion.**

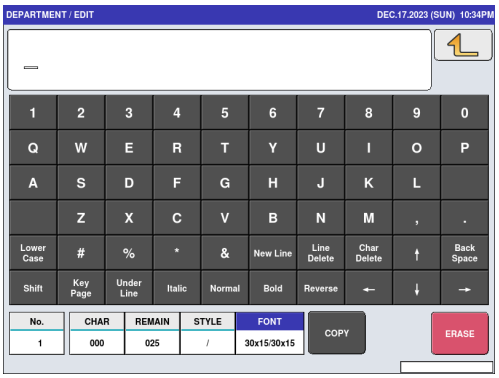

3. **The confirmation screen is displayed.**
To confirm the change, touch [SAVE].

SAVE

To undo the change, touch [CANCEL].

CANCEL

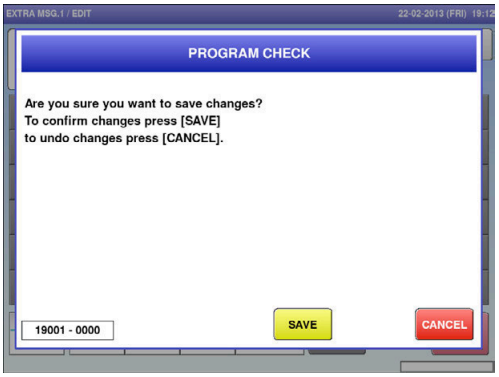

4.19.4 Data Erasure

1. **Touch the [ERASE] button to delete the entire text currently being called.**

ERASE

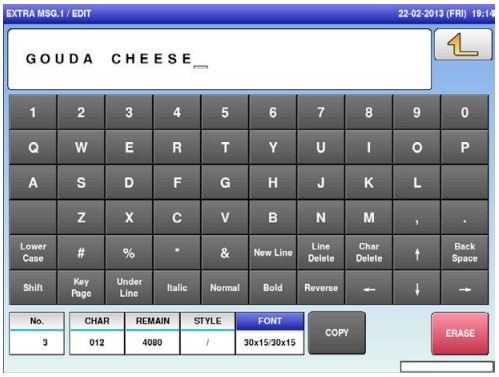

2. **The confirmation screen is displayed.**
Touch [EXEC] to continue, or [STOP] to go back.

EXEC

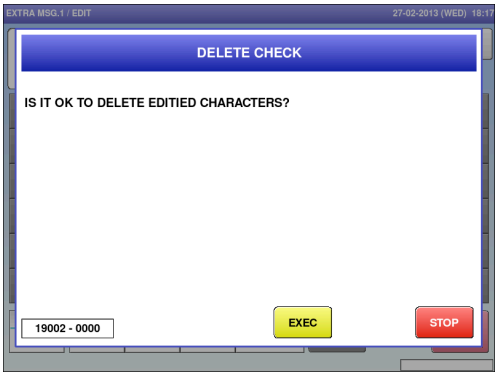

3. **The entire text has been deleted.**

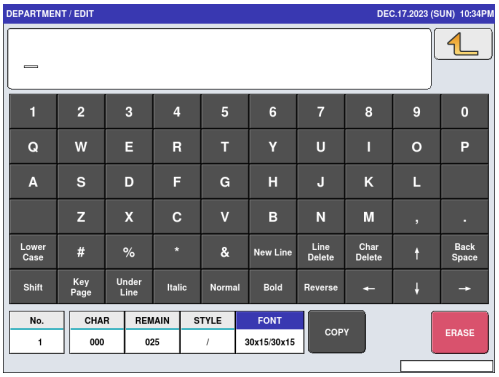

4.19.5 Data Copy

1. **To call up the desired string of characters, touch the INPUT field at the bottom right of the screen to display the keypad.**

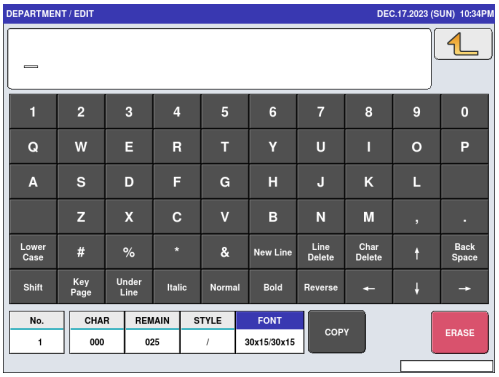

2. **Then enter a numerical value.**

0 ••• 9

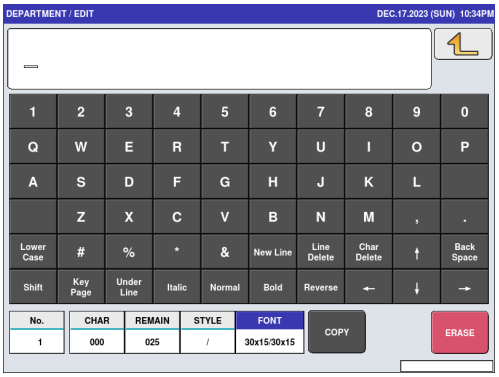

3. **Touch the [COPY] key while the number is displayed in the INPUT field.**

▶ COPY

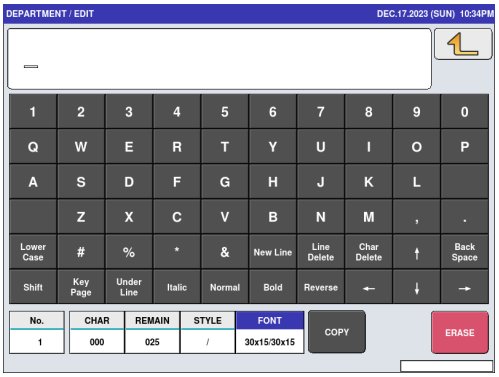

4. **The confirmation screen is displayed.**
Touch [EXEC] to continue, or [STOP] to go back.

EXEC

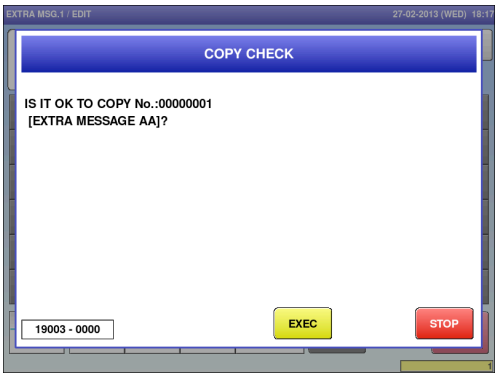

4

5. **The specified text has been copied.**

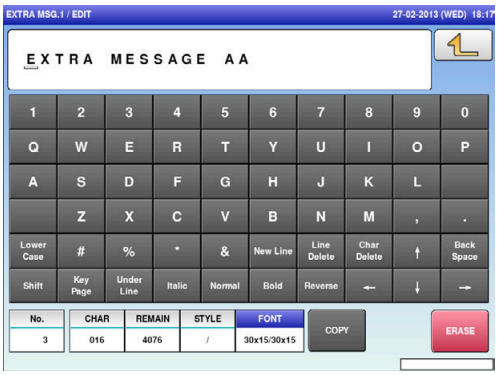

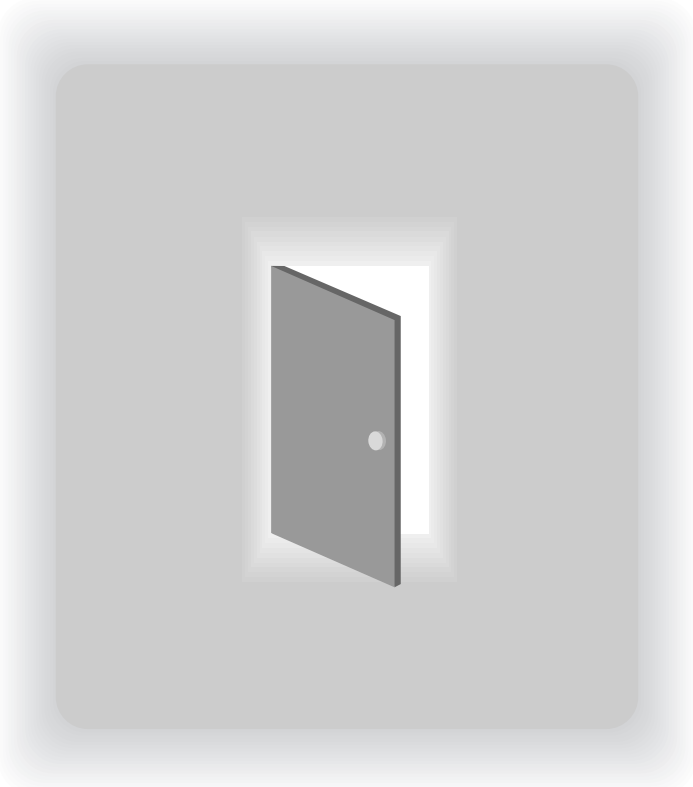

CHAPTER 5

DATA AGGREGATION

5.1 SWITCHING TO TOTAL MODE

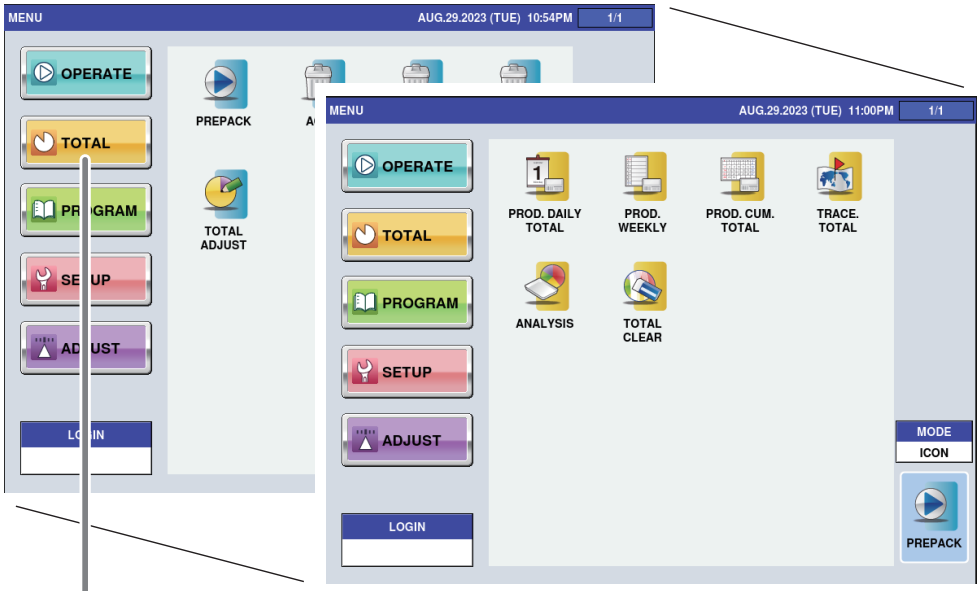

2. Displays the total menu screen.

---

1. Touch the Return button on the initial screen of the production mode.

The main menu screen is displayed.

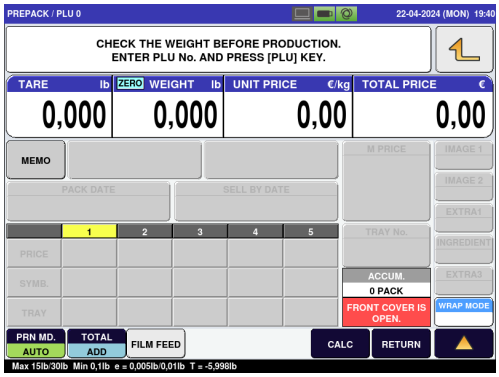

---

2. Touch [Total Mode] on the main menu screen.

The total menu screen is displayed.

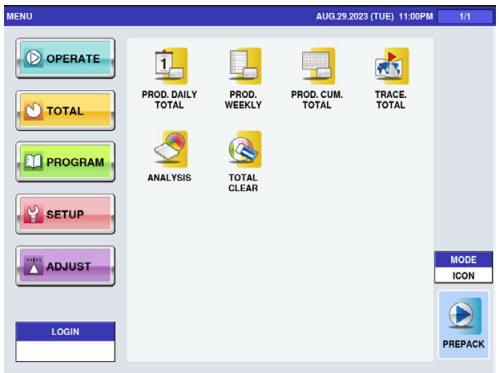

REFERENCE

If the password is set to the total mode, enter the password and touch [Login].
For information on how to set passwords, see "Password Settings" on page 7-3.

5.2 TOTALS

This section provides a brief explanation of the various types of totals.

■ PROD. DAILY TOTAL

Displays the total of production data for the production day can be displayed.

TOTAL	Displays the total of production data for the day.
HOUR	Displays the total of production data for the day by time zone.
DEPT.	Displays the total of production data for the day by major category.
GROUP	Displays the total of production data for the day by medium category.
PLU	Displays the total of production data for the day by arbitrary item.
TYPE	Displays the total of production data for the day by item. Also displays the total of production data in order of price and quantity.
ACC1-3	Displays the total of production data for the ACC 1 to 3 day by ACC 1 to 3.
REWRAP	Displays the total of production data for the day by rewrapping.
PROMO	Displays the total of production data for the day by markdown.

■ WEEKLY TOTAL

Displays the total of the production data for one week.

■ PROD. CUM. TOTAL

All production data until Total Clear is executed is aggregated and displayed.

TOTAL	Displays the total of all accumulated production data.
DEPT.	Displays the total of all accumulated production data for each department.
GROUP	Displays the total of all accumulated production data for each group.
TYPE	Displays the total of all accumulated production data for each type.

■ TRACE. TOTAL

Displays the total of production data for each traceability data.

■ ANALYSIS

Total production data until Total Clear is executed is aggregated and displayed on an hourly basis.

HOURS	Displays the total of accumulated production quantity and price data for each time zone.
WRAP MODE	Displays the total of production quantity data in the wrapping mode for each time zone.
TRAY	Displays the total of production quantity data per tray for each wrapping mode.

5.3 GRAND TOTAL

Production quantity, weight, and price data can be aggregated. This section provides a brief description of the production daily total (total) as an example.

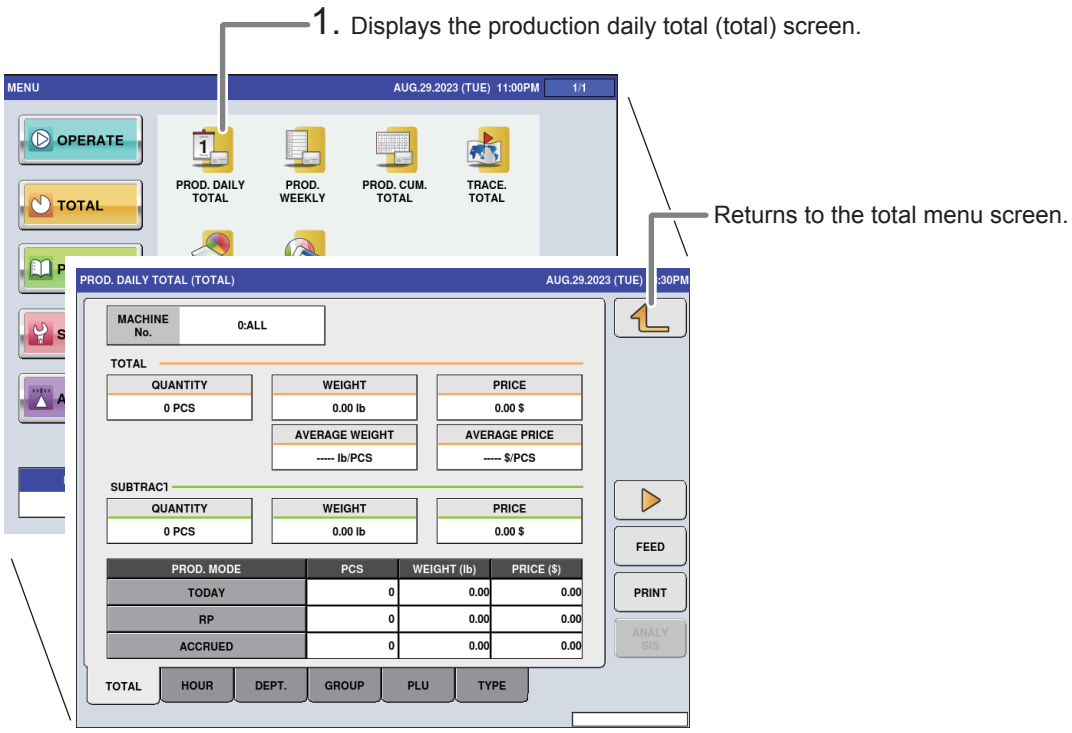

CAUTION

Totals cannot be printed out from this machine.
To print totals, an external device must be connected.
For details, please consult your ISHIDA dealer.

1. Touch [PROD.DAILY TOTAL] on the total menu screen.

The production daily total (total) screen is displayed.

2. Touch the [TOTAL] tab on the production daily total (total) screen.

The display changes to the production daily total (department) screen, and the quantity, weight, average weight, price, and average price are displayed.

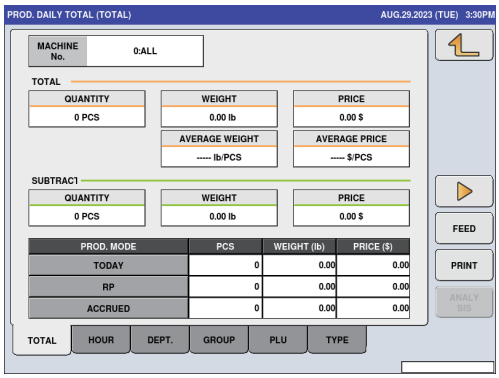

Note: Follow the same procedure for production cumulative total (department).

5.4 TOTALS PER DEPARTMENT

Production quantity, weight, and price data can be aggregated per category.
This section provides a brief explanation using production daily total (department) as an example.

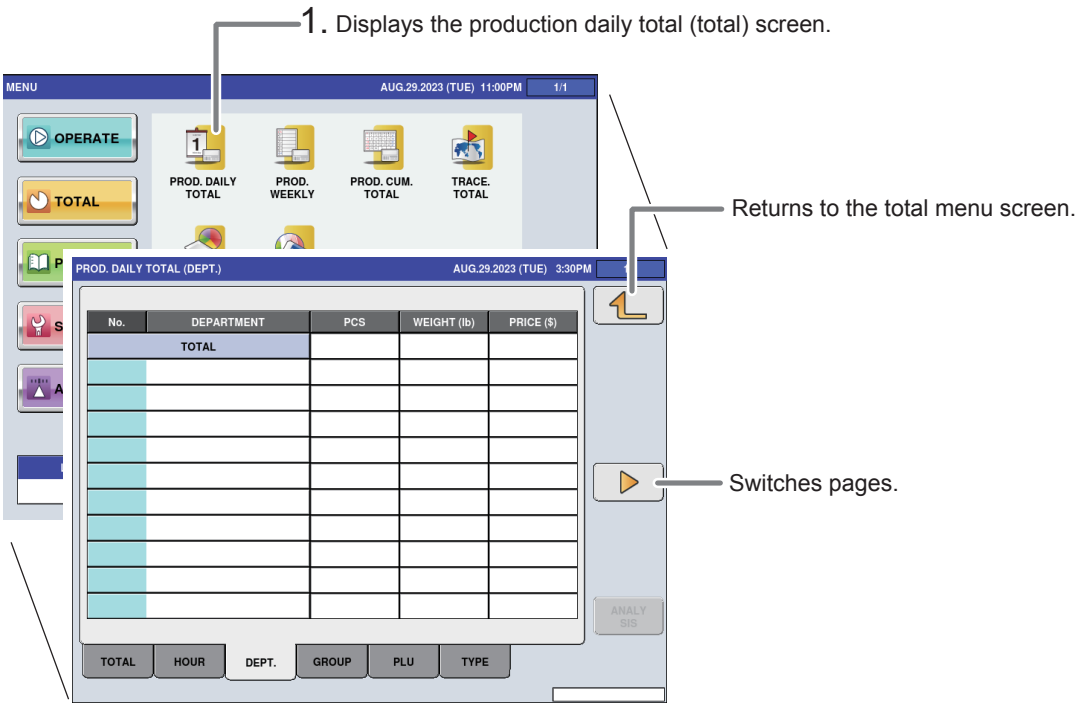

5

CAUTION

Totals cannot be printed out from this machine.
To print totals, an external device must be connected.
For details, please consult your ISHIDA dealer.

1. Touch [PROD. DAILY TOTAL] on the total menu screen.

The production daily total (total) screen is displayed.

2. Touch the [DEPARTMENT] tab on the production daily total (total) screen.

DEPT.

The system switches to the production daily total (department) screen and displays the quantity, weight, and price data.

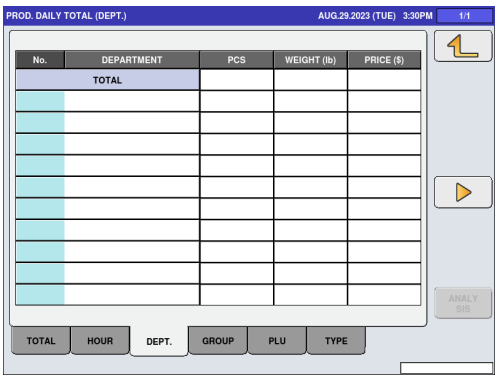

Note: Follow the same procedure for production cumulative total (department).

5.5 DESIGNATED ITEM TOTALS

Desired item data can be aggregated. This section provides a brief explanation using production daily total (PLU) as an example.

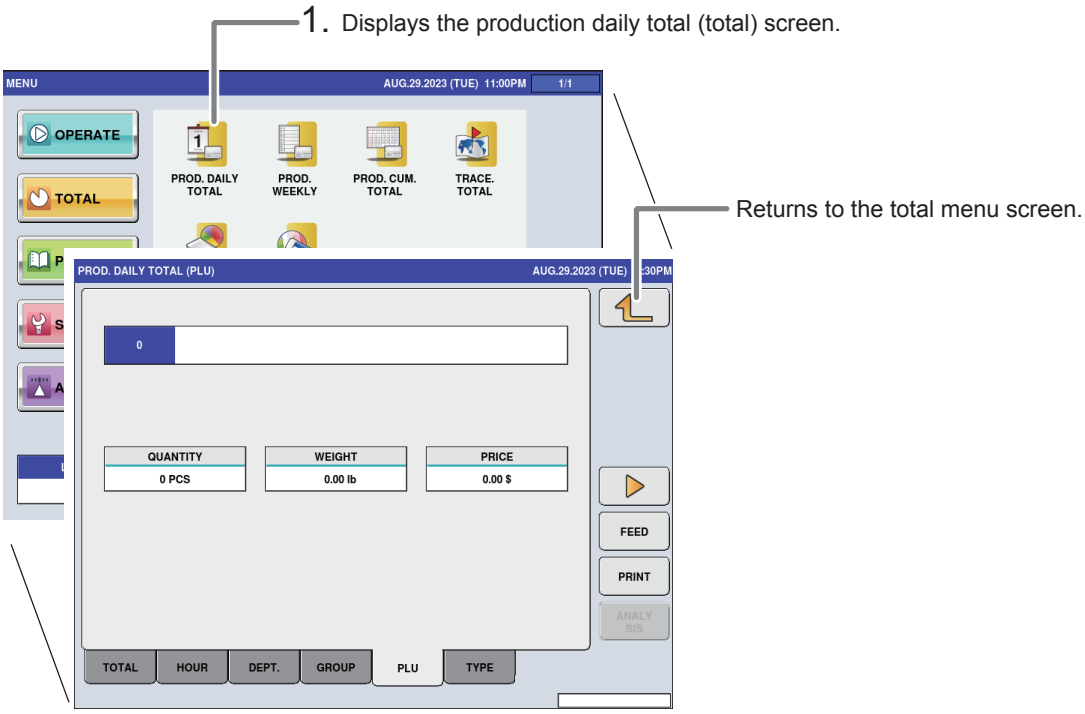

1. Touch the [PLU] tab on the production daily total screen.

PLU

The production daily total (PLU) screen is displayed.

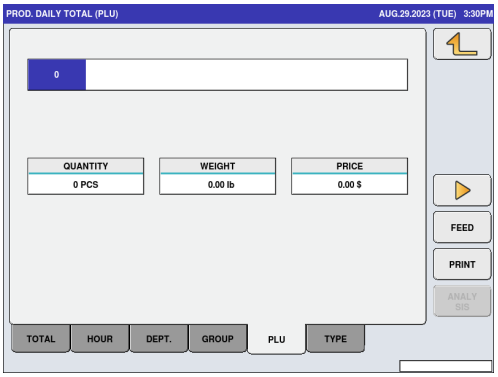

CAUTION

Production daily total (PLU) and production cumulative total (PLU) are printed on the label.

2. Call up the desired item.

Enter the item number and touch the [PLU] key.

0 ••• 9 PLU

3. Touch the [PRINT] key.

PRINT / PRINT

The total label for the designated item is issued.

Note: Follow the same procedure for production cumulative total (PLU).

INFORMATION

To feed the label, touch the [FEED] key.

FEED / FEED

5.6 TOTALS PER TYPE

Production quantity, weight, and price data can be aggregated for each item. This section provides a brief explanation using production daily total (type) as an example.

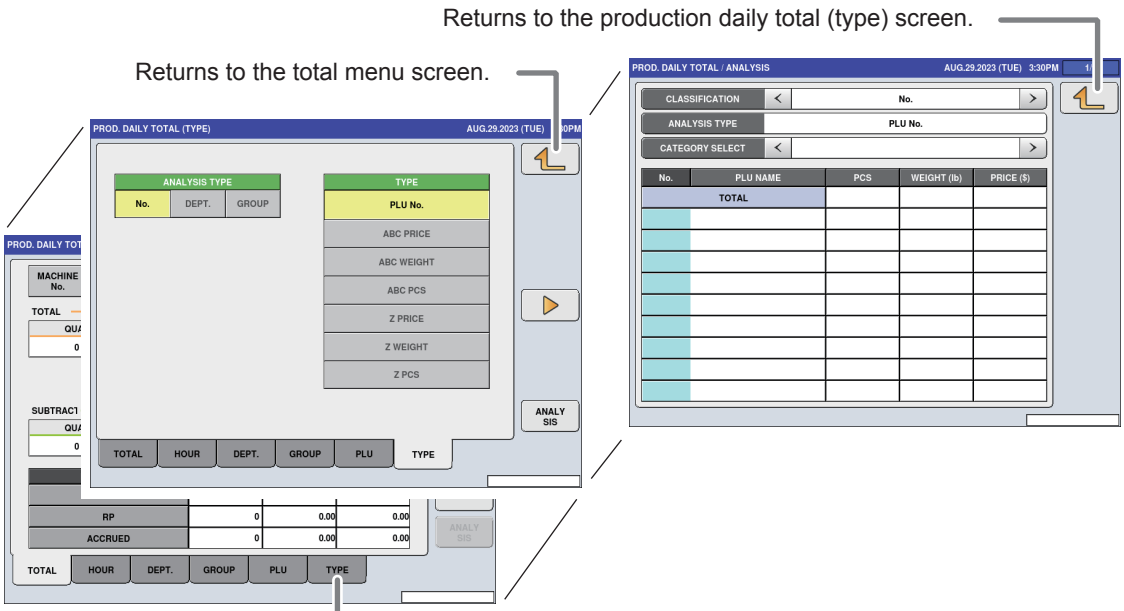

1. Touch the [TYPE] tab on the production daily total (total).

TYPE

The production daily total (type) screen is displayed.

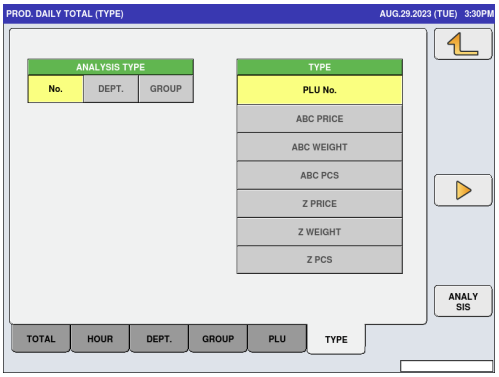

2. Select the analysis type.

No. : Total data aggregated by PLU number is displayed.
DEPT. : Total data aggregated by department is displayed.
GROUP : Total data aggregated by group is displayed.

CAUTION

Totals cannot be printed out from this machine.
To print totals, an external device must be connected.
For details, please consult your ISHIDA dealer.

3. Select the analysis type.

PLU No. : Displays and aggregates in order of item call number.
ABC PRICE : Displays and aggregates in descending order of gross price.
ABC WEIGHT: Displays and aggregates in descending order of gross weight.
ABC PCS : Displays and aggregates in descending order of gross quantities.
Z PRICE : Displays and aggregates in ascending order of gross price.
Z WEIGHT : Displays and aggregates in ascending order of gross weight.
Z PCS : Displays and aggregates in ascending order of gross quantity.

4. Touch [ANALYSIS].

The display changes to the production daily total (analysis) screen.

Note : Follow the same procedure for production cumulative total (type).

5.7 TOTALS PER HOUR

Production quantity, weight, and price data can be aggregated for each time zone.

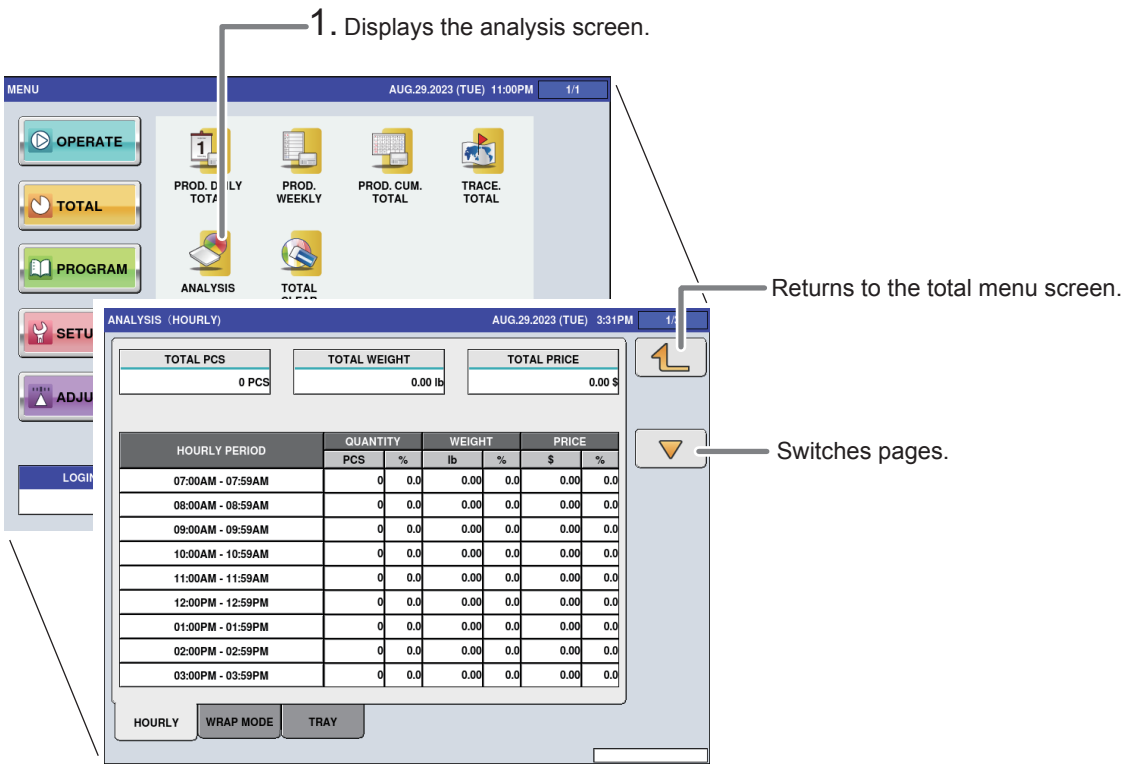

CAUTION

Totals cannot be printed out from this machine.
To print totals, an external device must be connected.
For details, please consult your ISHIDA dealer.

1. Touch [ANALYSIS] on the total menu screen.

The analysis screen is displayed.

2. Touch the [HOURLY] tab on the analysis (HOURLY) screen.

The system switches to the analysis (hourly) screen and displays the quantity, weight, and price data per hour.

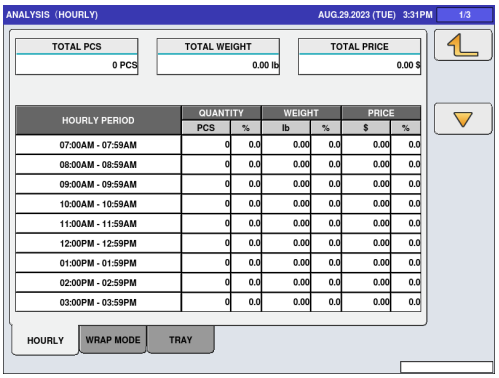

5

5.8 TOTALS PER WRAPPING MODE

Hourly production data can be displayed for each wrapping mode.

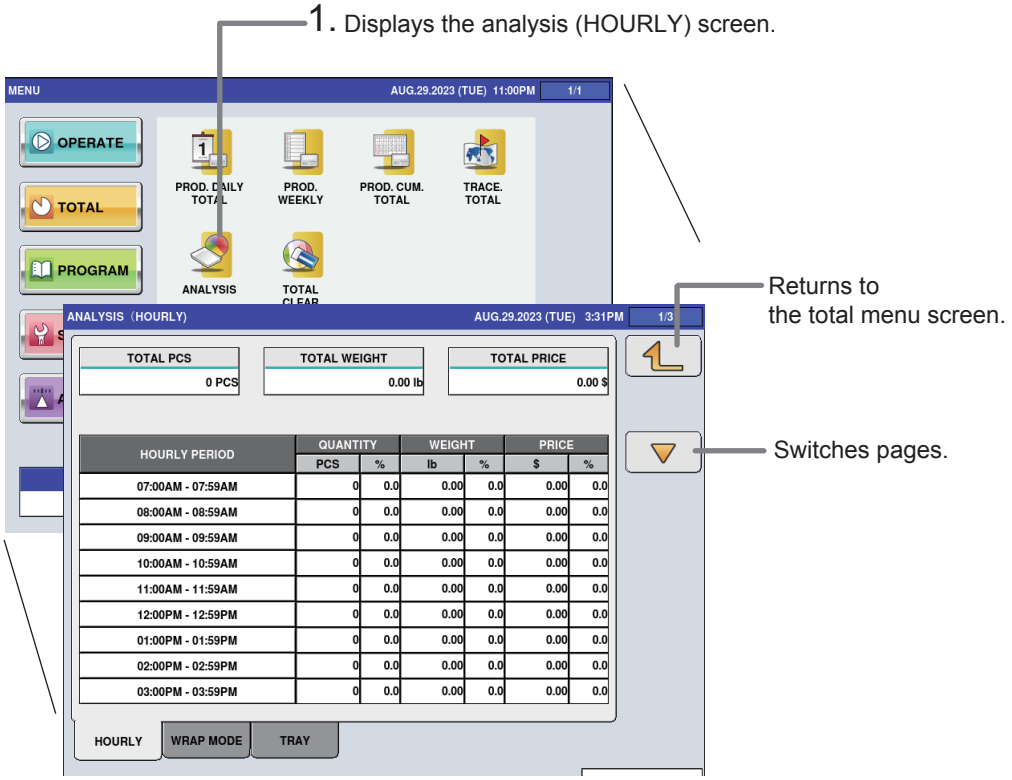

CAUTION

To output data, an external device must be connected.
For details, please consult your ISHIDA dealer.

1. Touch [ANALYSIS] on the total menu screen.

The analysis (HOURLY) screen is displayed.

2. Touch the [WRAP MODE] tab on the analysis (HOURLY) screen.

The analysis (wrapping mode) screen is displayed.

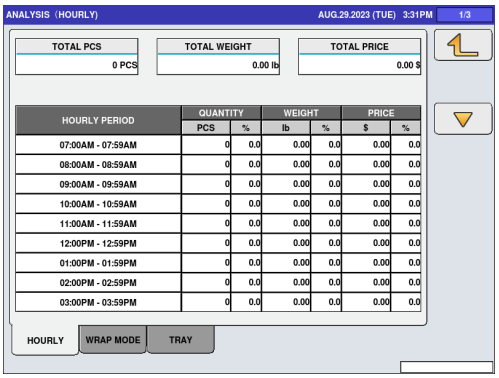

5.9 TOTALS PER TRAYS

Production data can be aggregated and displayed per tray.

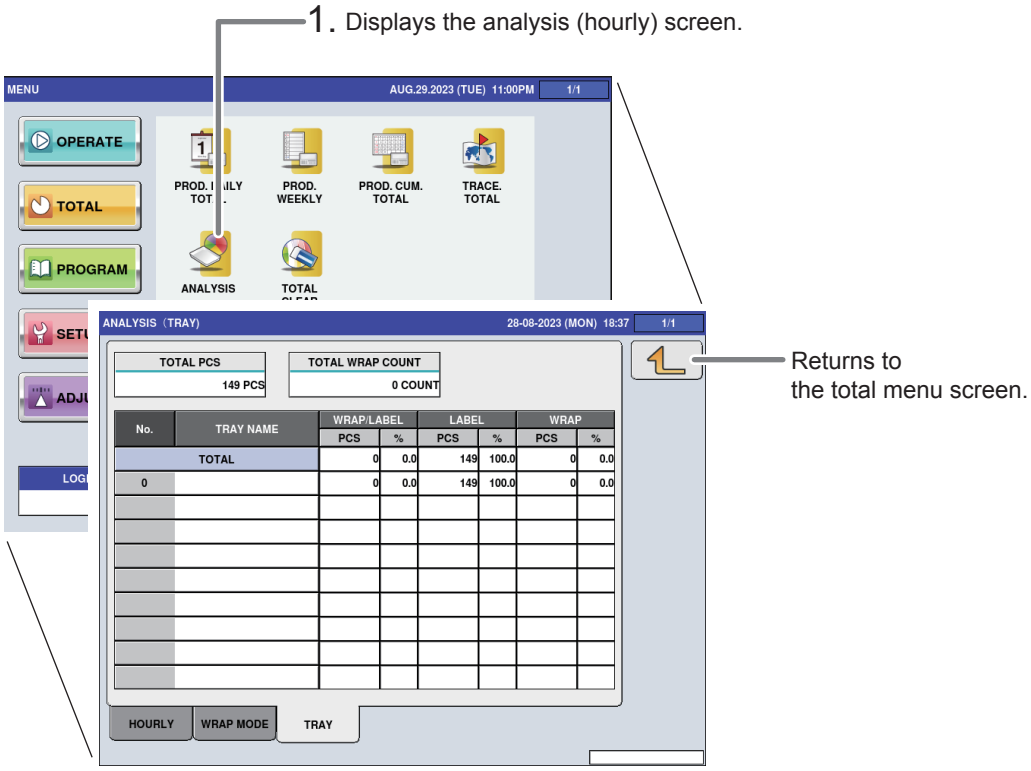

CAUTION

Totals cannot be printed out from this machine.
To print totals, an external device must be connected.
For details, please consult your ISHIDA dealer.

1. Touch [ANALYSIS] on the total menu screen.

The analysis screen is displayed.

2. Touch the [TRAY] tab on the analysis (hourly) screen.

The analysis (tray) screen is displayed.

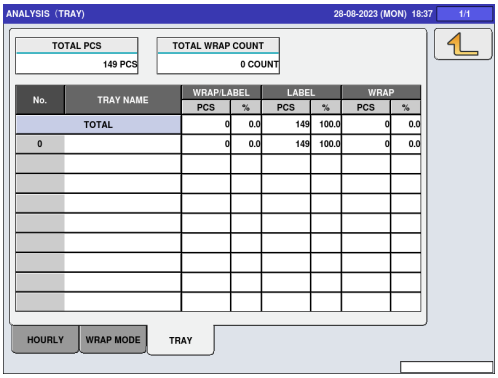

5.10 TOTAL CLEAR

The accumulated data can be cleared.

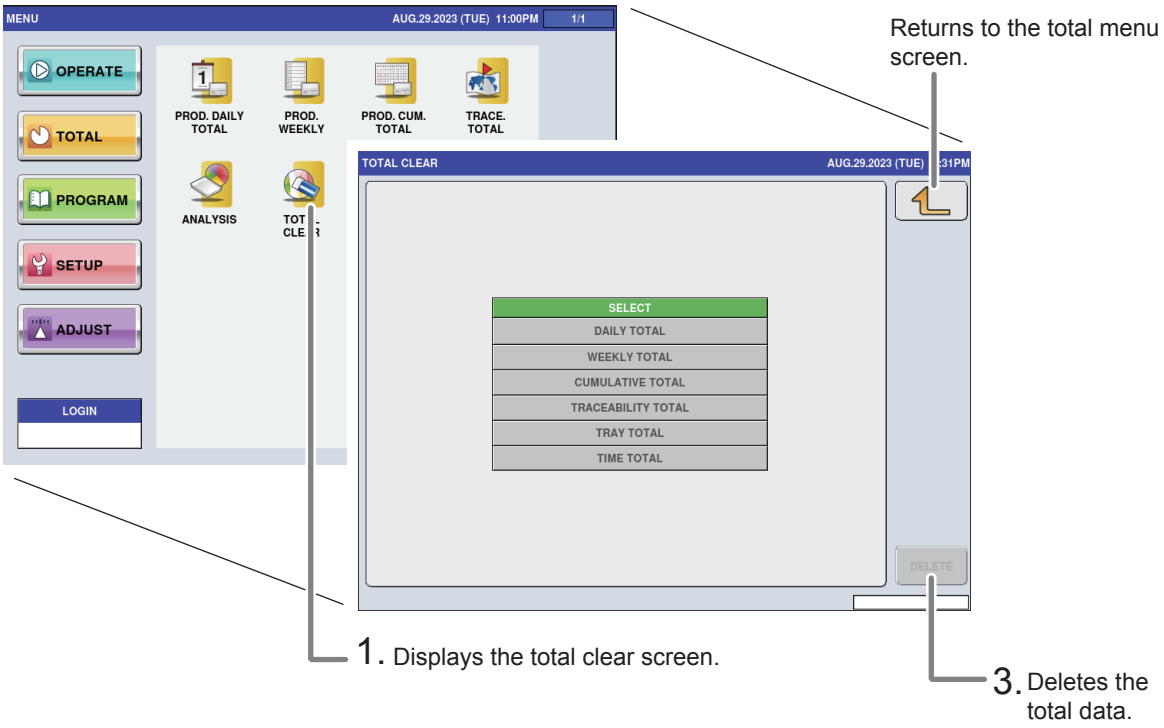

1. Touch [TOTAL CLEAR] on the total menu screen.

The total clear screen is displayed.

2. Select the items to be cleared from among cumulative totals.

Total to be deleted can be selected by pressing the field(s). Once selected, they willbe highlighted.

3. Touch [DELETE] to clear the selected totals.

DELETE

The delete confirmation screen is displayed.

EXECUTE

Touch [EXECUTE].

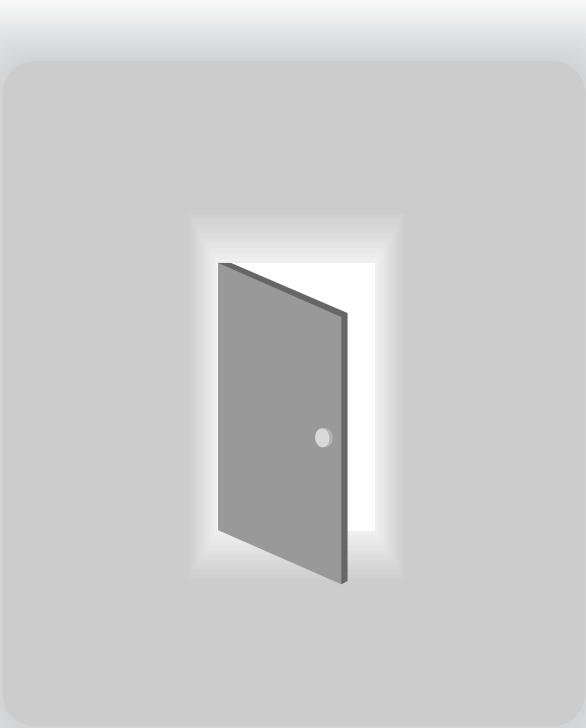

CHAPTER 6

TOTAL DATA CORRECTION

6.1 SWITCHING TO SUBTRACTION MODE

Data for incorrectly produced commodity items can be deleted from the total.
In addition, the lack of production data can be added here.

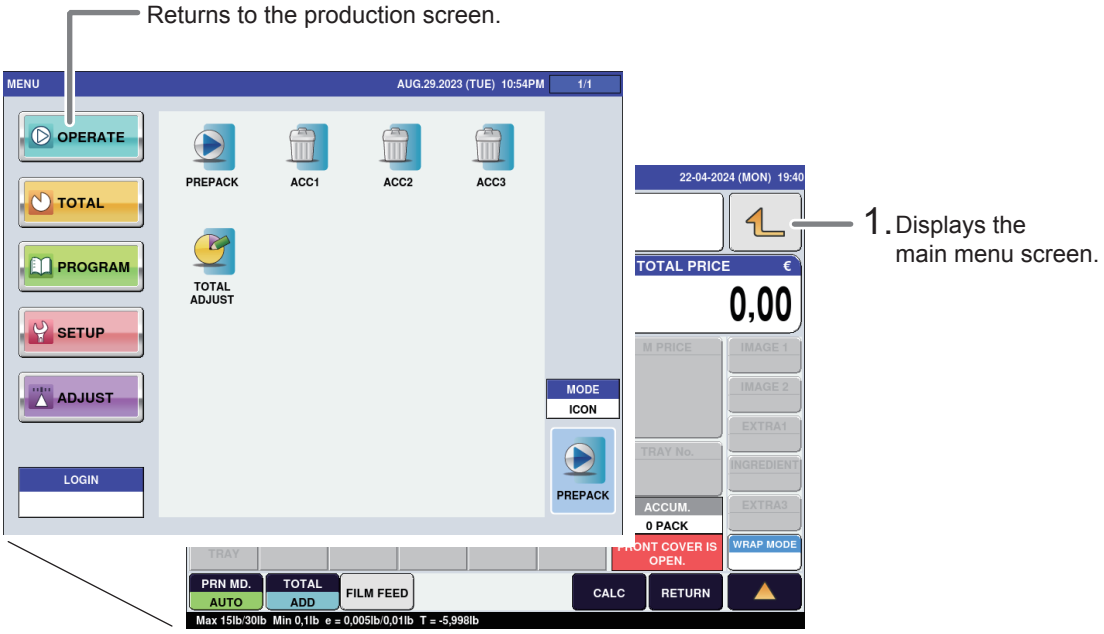

⚠ CAUTION

Ensure that no items being processed are left in the wrapper.

1. Touch the Return button on the initial screen of the production mode.

The main menu screen is displayed.

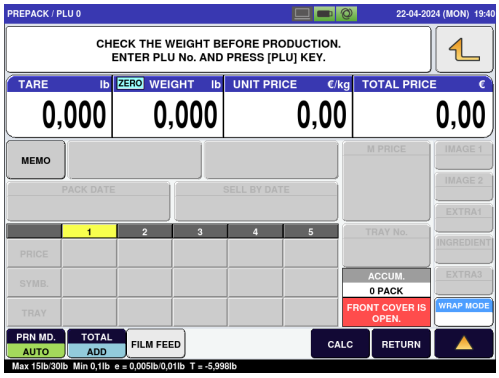

2. Touch [TOTAL ADJUST] on the operate mode menu screen.

The total adjustment screen is displayed.

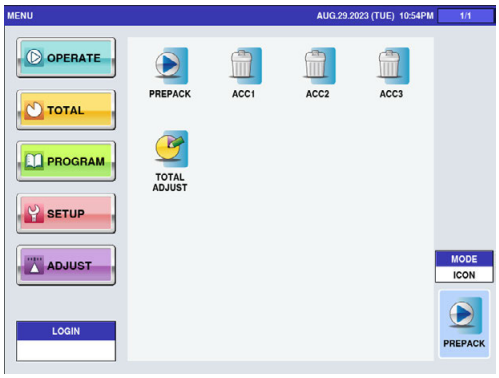

6.2 SUBTRACTION BY NUMERICAL ENTRY

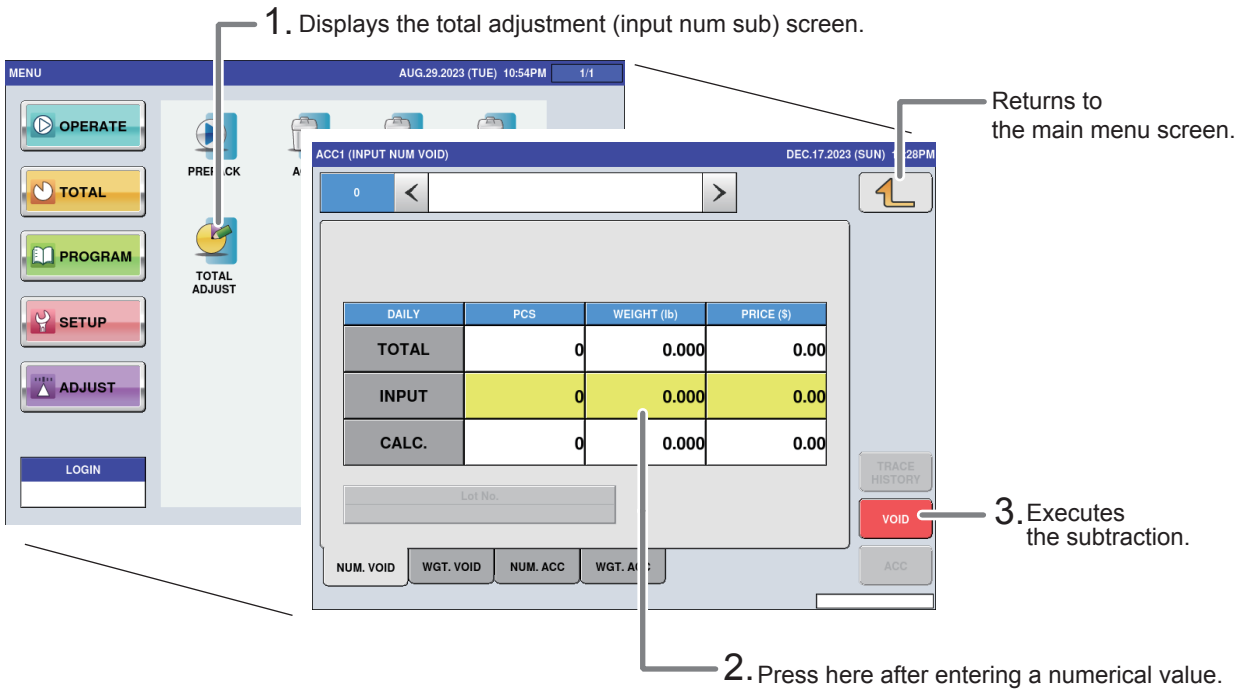

REFERENCE

If a password is set for the total adjustment mode, enter the 4-digit password and touch [Login].

1. Touch the [NUM. SUB] tab on the subtraction screen.

NUM. SUB

The total adjustment (input num sub) screen is displayed.

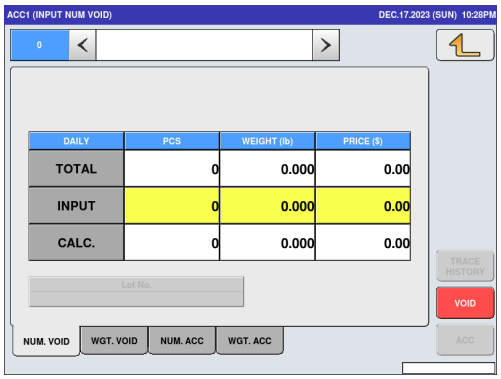

2. Enter numerical values in the quantity, weight, and price fields, respectively.

0 ••• 9 | INPUT | 0 | 0 | 0

3. Execute the subtraction.

SUB

Touch [SUB] to display the subtraction confirmation screen.

EXECUTE

Touch [EXECUTE].

6.3 ADDITION BY NUMERICAL ENTRY

Data with numerical values entered can be added to the total data.

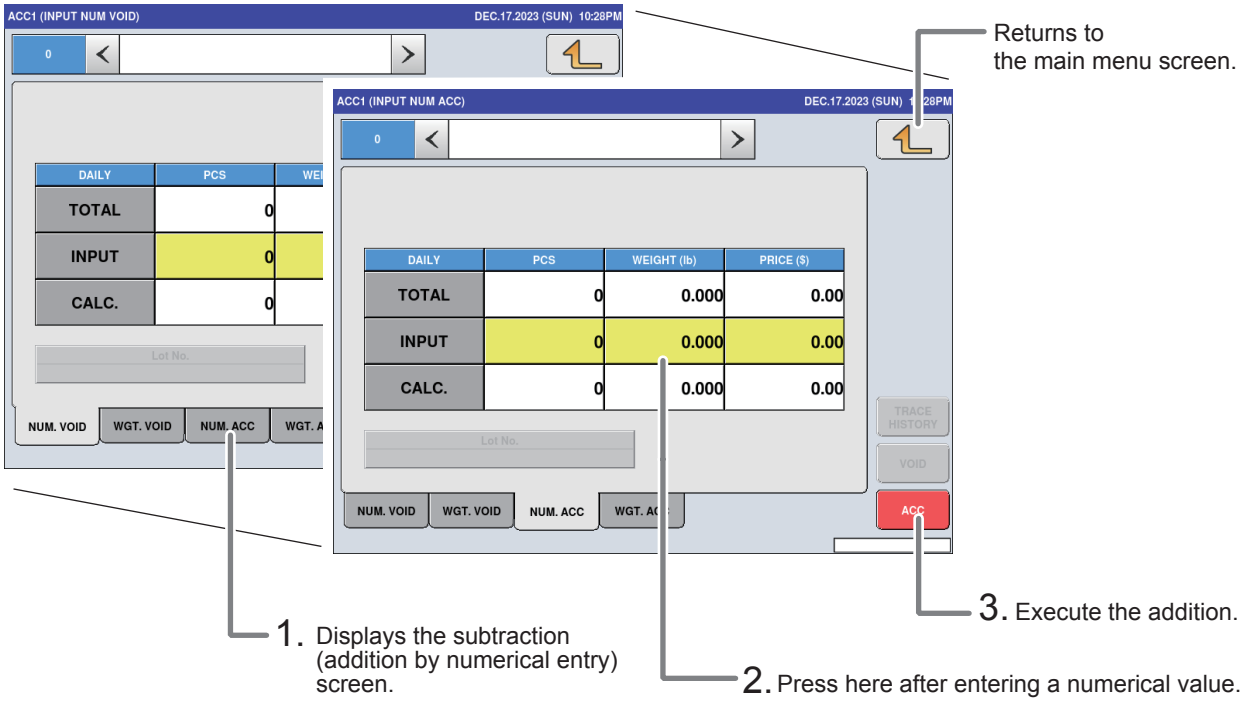

REFERENCE

If a password is set for the total adjustment mode, enter the 6-digit password and touch [Calculate/Add].

1. Touch the [NUM.ADD] tab on the subtraction screen.

NUM. ADD

The total adjust (input num sub) is displayed.

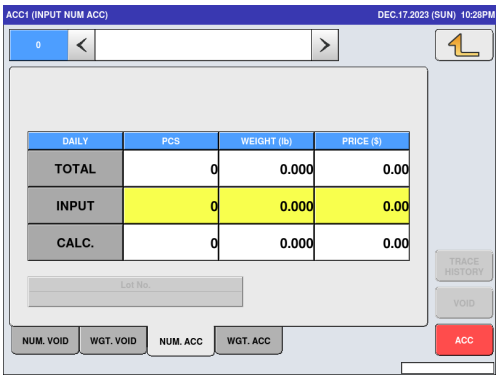

2. Enter numerical values in the quantity, weight, and price fields, respectively.

0 ••• 9 | INPUT | 0 | 0 | 0

3. Executes the addition.

ADD

Touch [ADD] to display the addition confirmation screen.

EXECUTE

Touch [EXECUTE].

CHAPTER 7

SETTING MODE

7.1 SWITCHING TO SETUP MODE

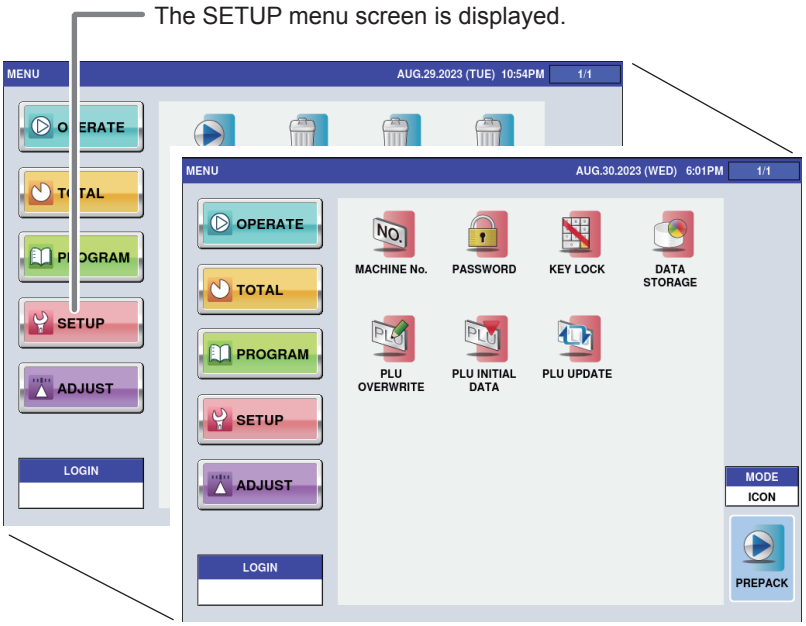

1. **Touch the Return button on the initial screen in the production mode.**

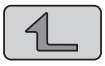

The main menu screen is displayed.

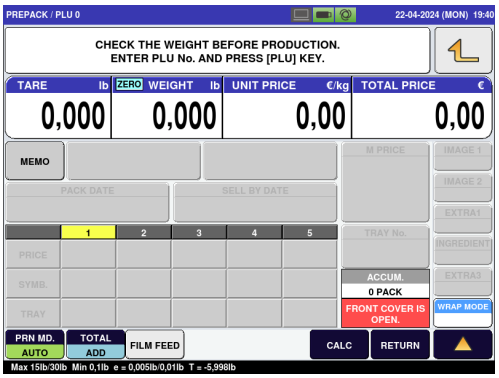

2. **Touch [Setup Mode] on the main menu screen.**

The setup menu screen is displayed.

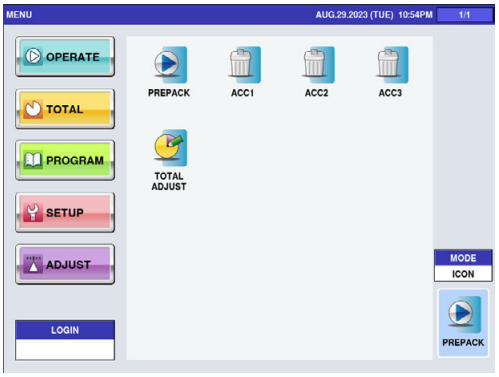

7.2 PASSWORD SETTINGS

This section describes how to set passwords for menu items in each mode.

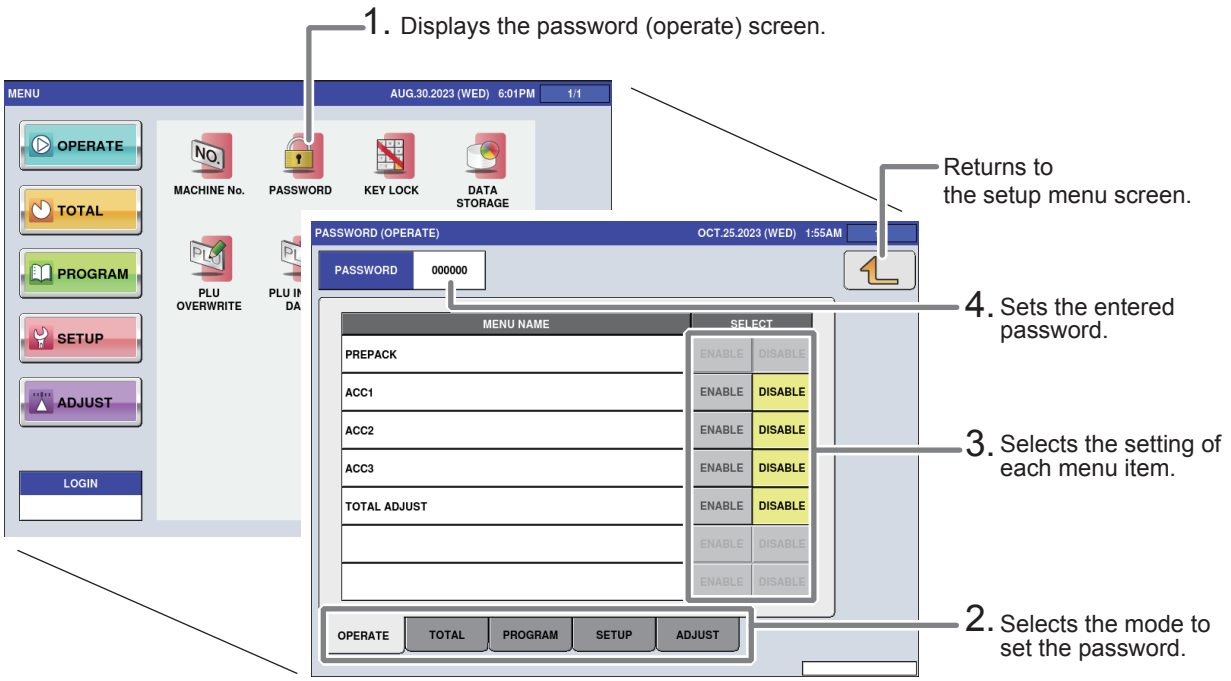

1. Touch [Password] on the setup menu screen.

The password (operate) screen is displayed.

2. Touch the tab at the bottom of the screen to select the mode for setting.

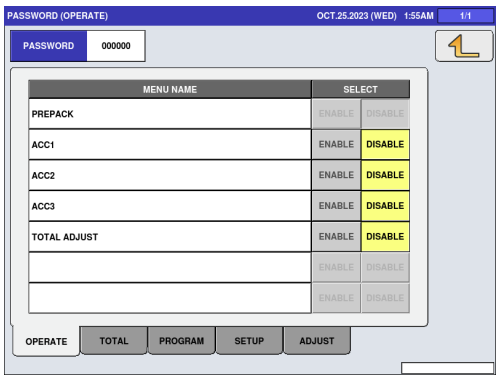

3. Select the setting of each menu item.

USE	NO USE

4. Enter the password.

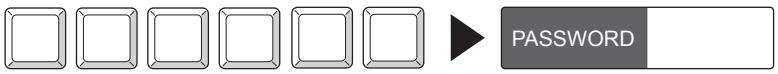

Password (6 digits)

The entered password is displayed.

CAUTION

The administrator is requested to write down all passwords so as not to forget them.

7.3 KEY LOCK SETTINGS

This section describes how to set key locks for the display, function, and stroke keys.

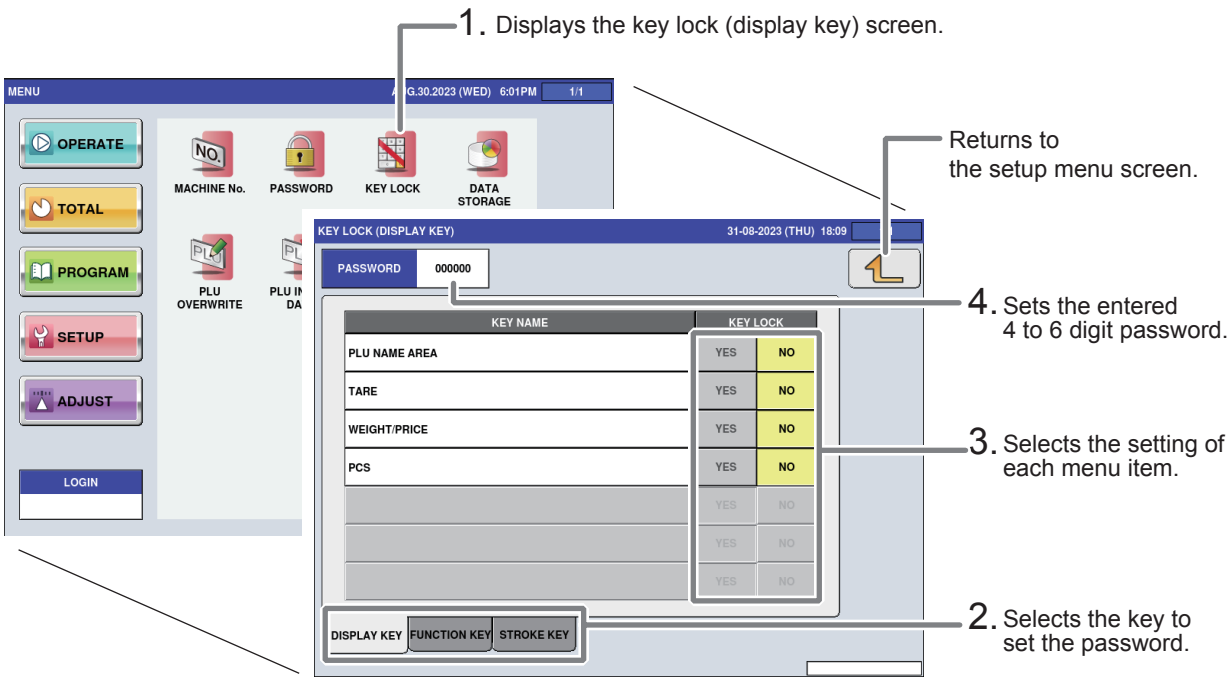

1. Selects the key to set the password.

Touch the [KEY LOCK] on the setup menu screen.

2. Touch the tab at the bottom of the screen to select the key.

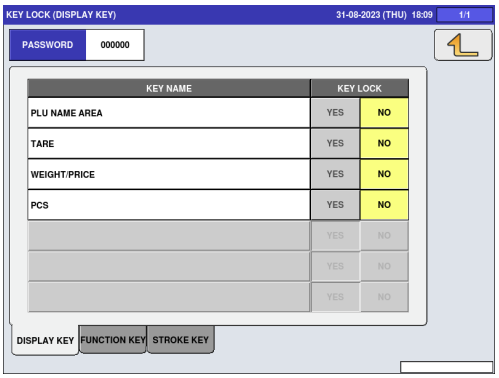

3. Select the setting of each menu item.

USE	NO USE

4. Enter the password.

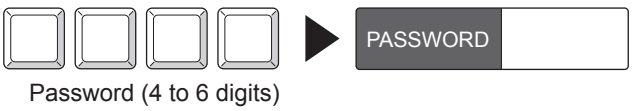

Password (4 to 6 digits)

The entered password is displayed.

CAUTION

The administrator is requested to write down all passwords so as not to forget them.

7.4 DATA STORAGE SETTINGS

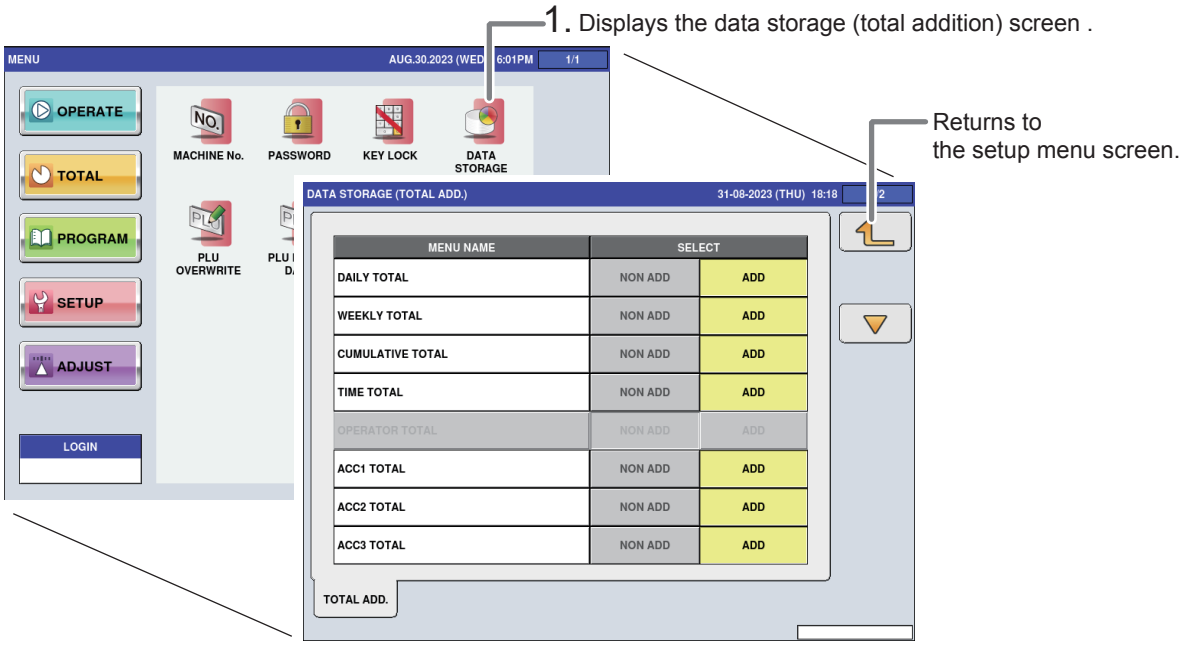

1. Touch [DATA STORAGE] on the setup menu screen.

The data storage setting screen is displayed.

2. Set the necessary items.

DAILY TOTAL	When “Add” is set, it is totalized in the Daily Total of the Total Mode. In addition, the pack count for each item is displayed above the input field of Production Mode.
WEEKLY TOTAL	When “Add” is set, it is totalized in the Weekly Total of the Total Mode.
CUMULATIVE TOTAL	When “Add” is set, it is totalized in the Cumulative Total of Total Mode.
TIME TOTAL	When “Add” is set, it is totalized in the Total per Hour and Total per Wrapping Mode of Work Analysis in Total Mode.
ACC1-3 TOTAL	When “Add” is set, it is totalized in the Accumulated Total of Total Mode.
REWRAP TOTAL	When “Add” is set, it is totalized in the Total per Rewrap of Analysis in Total Mode.
TRAY TOTAL	When “Add” is set, it is totalized in the Total per Tray of Analysis in Total Mode.

7.5 PLU OVERWRITE SETTING

This setting automatically makes temporary changes in production mode permanent.

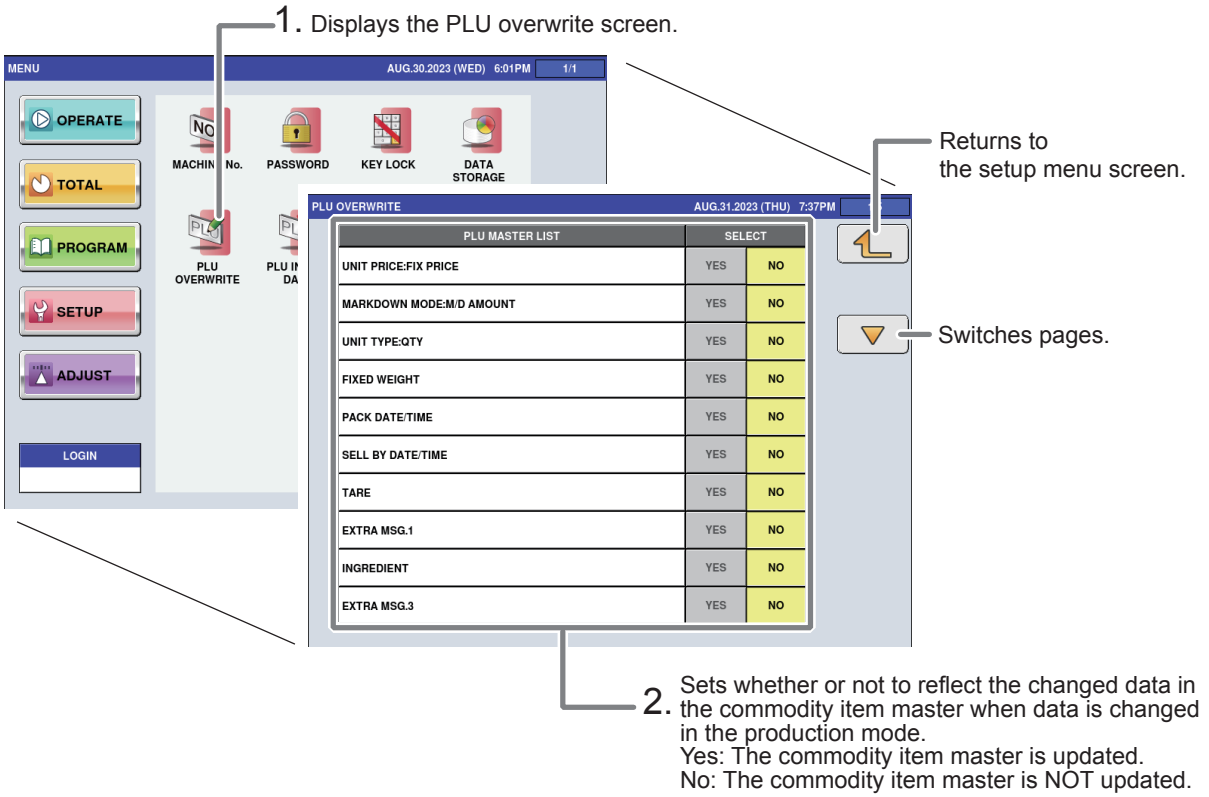

1. Touch [PLU OVERWRITE] on the setup menu screen.

The PLU overwrite screen is displayed.

2. Touch "YES" for required commodity items on the PLU overwrite screen.

YES	NO

7.6 PLU INITIAL DATA SETTING

PLU initial values can be set when registering the commodity items.

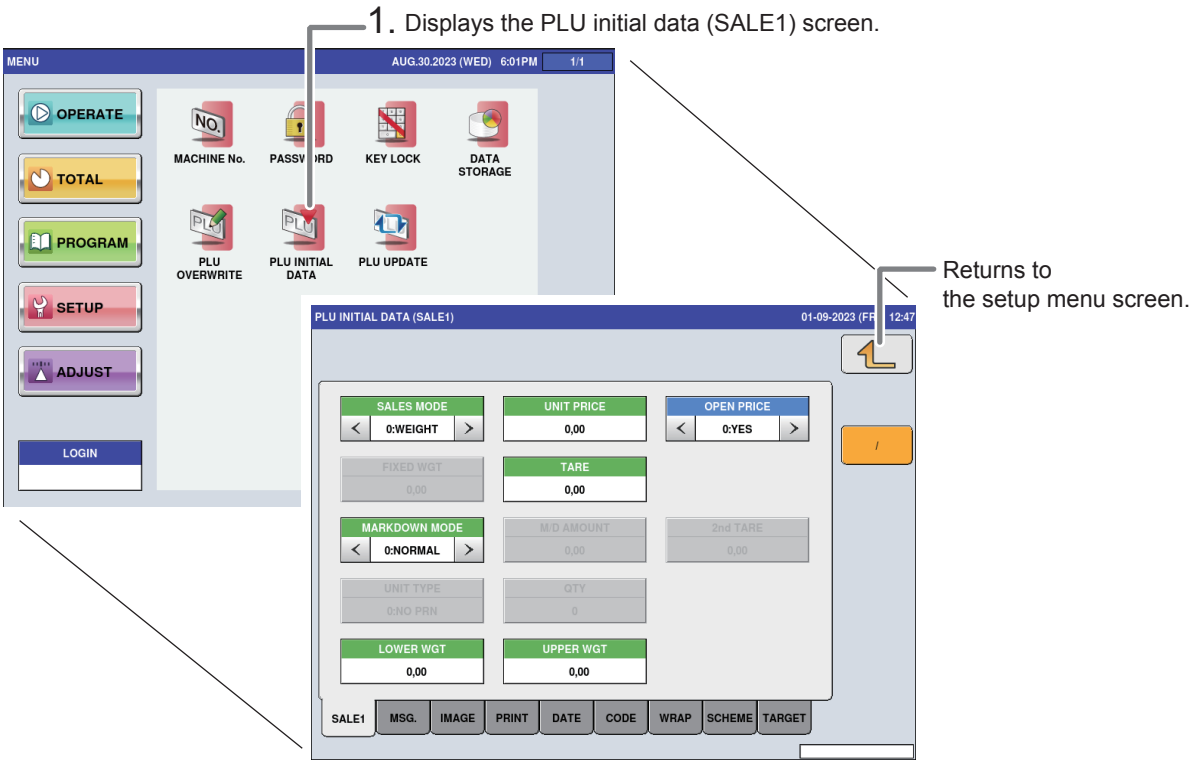

1. Touch [PLU INITIAL DATA] on the setup menu screen.

The PLU initial data (SALE1) screen is displayed.

2. Set the initial value of the PLU on this screen.

7.7 PLU UPDATE SETTING

Commodity item data that has already been registered can be changed or updated in a batch.

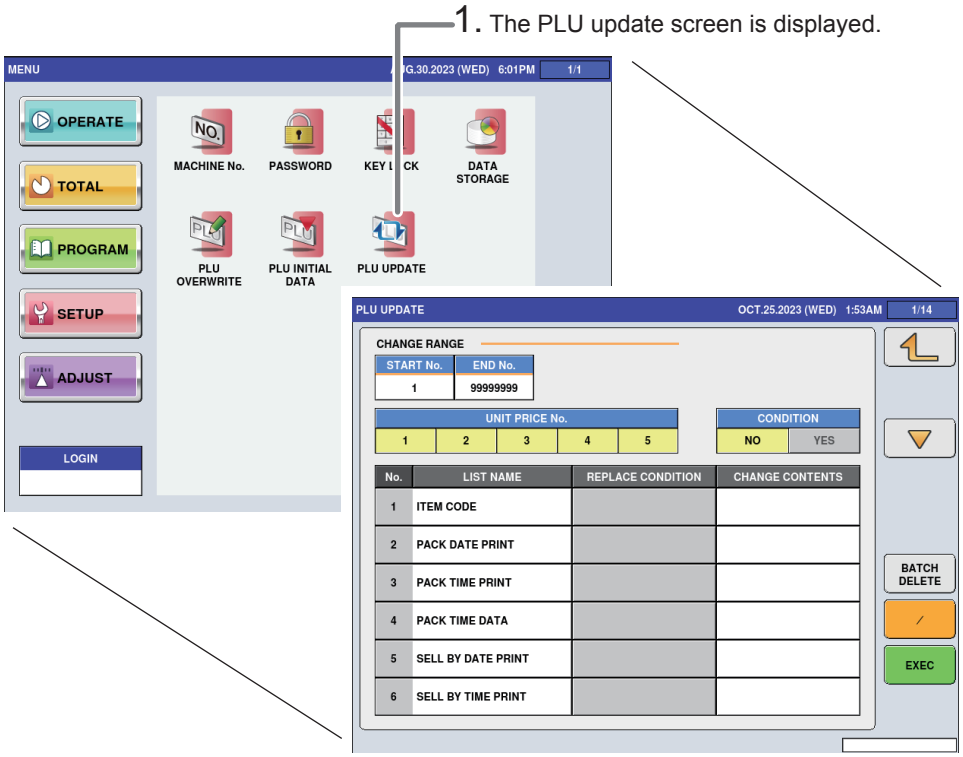

INFORMATION

If the condition is set to "YES", the replace condition can be entered, and only items that match the condition can be changed in a batch.
Furthermore, by setting a change range, changes can be made only to specific PLU.

1. Touch [PLU UPDATE] on the setup menu screen.

The PLU update screen is displayed.

2. Select the data you want to change from "LIST NAME".

3. Enter the settings you want to change.

4. Perform batch changes.

EXEC

Touch [EXECUTE] to display the batch update confirmation screen.
Touch [EXECUTE] again to start the operation.

CHAPTER 8

ADJUSTMENT MODE

8.1 SWITCHING TO ADJUSTMENT MODE

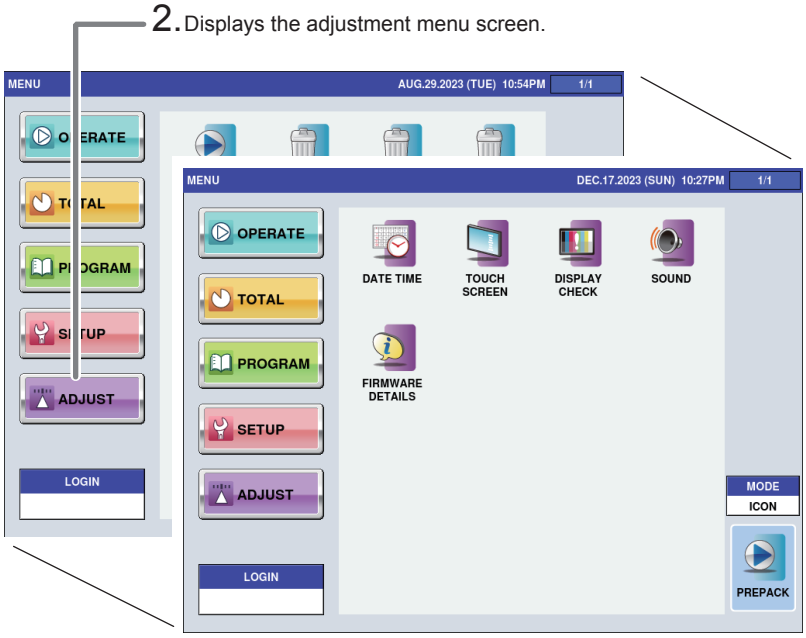

1. **Touch the Return button on the initial screen in the production mode.**

The main menu screen is displayed.

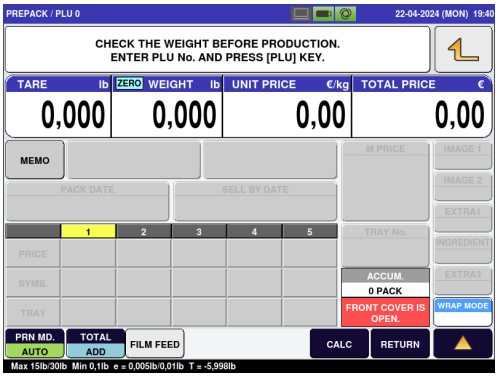

2. **Touch [ADJUST] on the main menu screen.**

The adjustment menu screen is displayed.

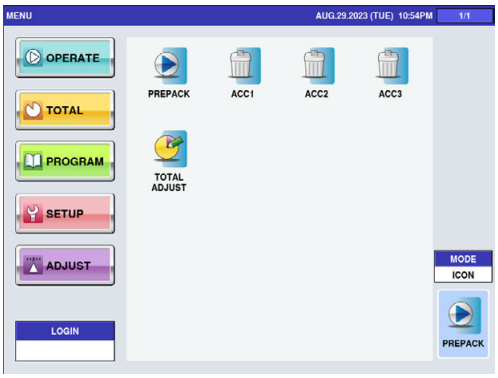

8.2 DATE AND TIME ADJUSTMENT

This section describes how to adjust the date, time, and year on the machine's internal clock.

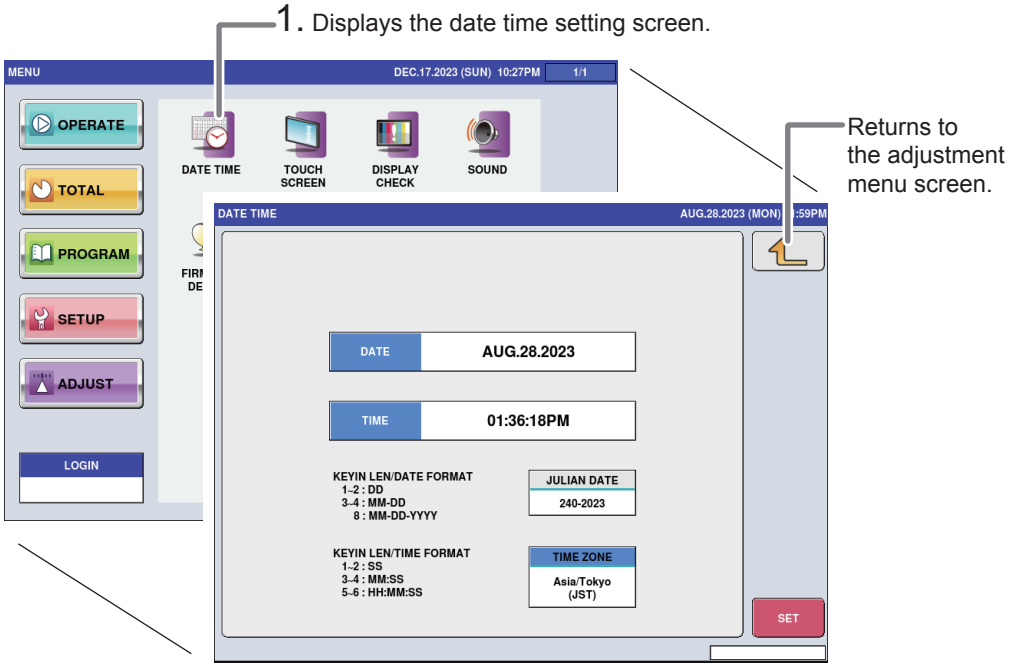

1. Touch [DATE TIME] on the adjustment menu screen.

The date time setting screen is displayed.

2. Enter the date.

Example: January 15, 2024

2 0 2 4 0 1 1 5 DATE

3. Enter the time.

[Example] 09:35:00

9 3 5 0 0 TIME

4. Touch [SET].

SET

The data entered for each item is set.

8

8.3 TOUCH SCREEN ADJUSTMENT

This section describes how to adjust the touch position on the touch-panel.

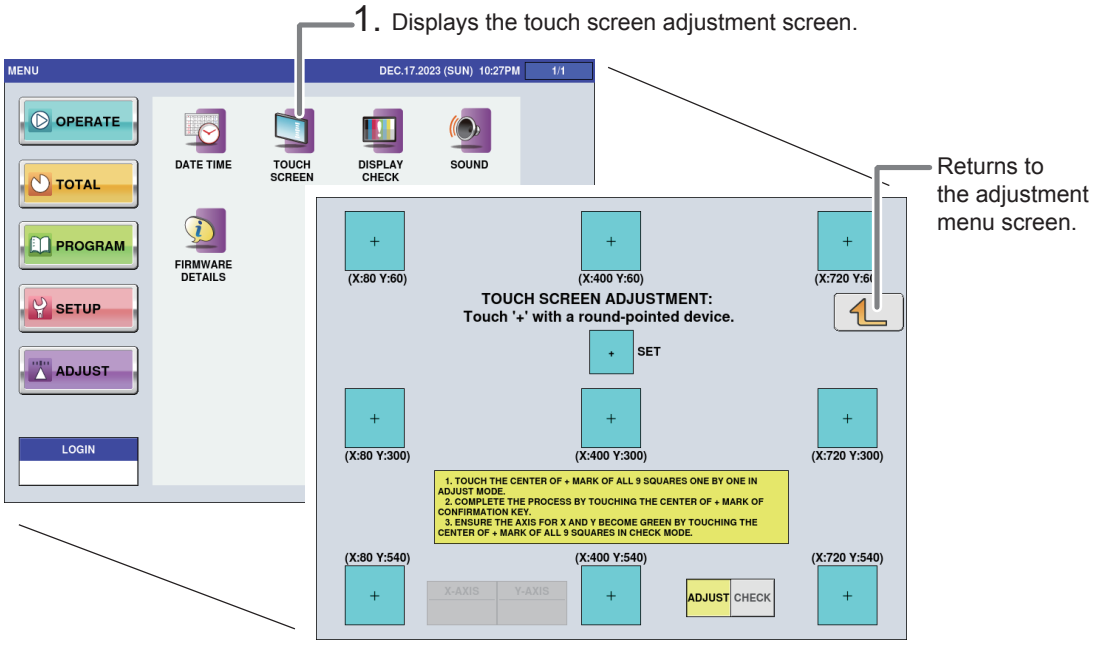

1. Touch [TOUCH SCREEN] on the adjustment screen.

The touch screen adjustment screen is displayed.

2. Touch the center of the nine [+] buttons on the screen.

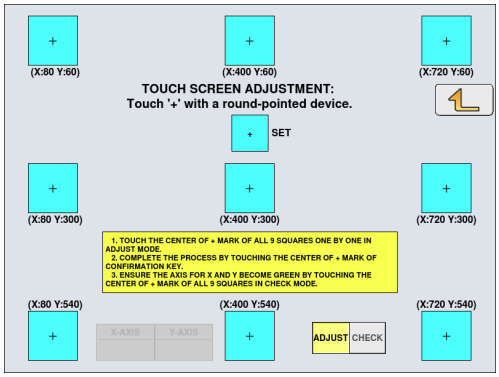

3. Touch the confirmation key [+] on the center middle of the screen.

CAUTION

To adjust the touch position on the touch-panel, touch the screen lightly. Touching the screen too hard may damage the touch-panel.

INFORMATION

9 9 9 PLU

Enter "999" and touch [PLU] to initialize the touch position.

8.4 SCREEN BRIGHTNESS ADJUSTMENT

The brightness of the touchscreen's vertical and horizontal screens can be adjusted.

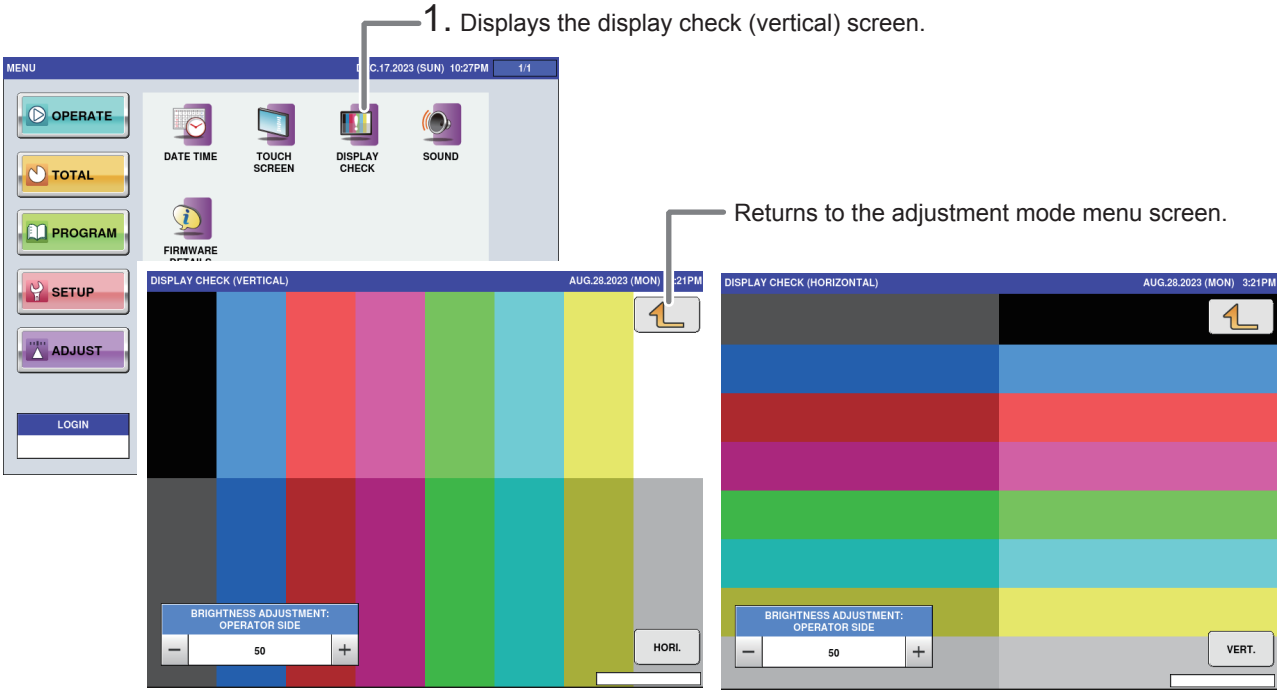

1. Touch [DISPLAY CHECK] on the adjustment menu screen.

The display check (vertical display) screen is displayed.

INFORMATION

Brightness can also be adjusted by touching [Brightness Adjustment] after entering a numerical value.

2. Adjust the vertical screen brightness.

Touch [-] to darken the screen.
Touch [+] to brighten the screen.

3. Touch [HORIZONTAL].

The display check (horizontal) is displayed.

4. Adjust the brightness of the horizontal screen.

Memo

APPENDIX

OTHERS

A-1. SPECIFICATIONS

Model		**L type** (With liner / Linerless)	**LL type** (With liner / Linerless)
Scale unit	Weighing capacity	Multi-intarval 0 - 6 kg x 0.002 kg / 6 - 15 kg x 0.005 kg	Multi-intarval 0 - 6 kg x 0.002 kg / 6 - 15 kg x 0.005 kg 0 - 15 lb x 0.005 lb /15 - 30 lb x 0.01 lb Single-range 0 - 15 kg × 0.005 kg 0 - 30 lb × 0.01 lb
	Weighing accuracy	1/3000	
	Minimum graduation	0.04 kg (0.1 lb)	
Wrapping unit	Wrapping capacity	0.04 - 3.5 kg (0.1 - 7.72 lb)	
	Packs per minute (MAX)	15 ppm	
	Wrapping size *1	Width: 150 - 350 mm Depth: 127 - 244 mm Height: 10 - 130 mm	Width: 150 - 380 mm (5.9 - 14.9 inch)*2 Depth: 127 - 244 mm (5 - 9.6 inch) Height: 10 - 130 mm (0.3 - 5.1 inch)
	Tray type	PSP, PP, PET, Paper *3	
	Film type	Polyolefin / PVC (film type suitable for automatic wrapping)	
	Film size	400, 450, 500 mm	
	Film outside diameter	ϕ200 mm or less	
Printer unit	Print head	3 inch direct thermal (960 dots), 12 dots/mm	
	Printing speed	120 mm/sec	
	Print area	With line Width: Up - 76 mm (2.9 inch) Linerless Width: Up - 77 mm (3.0 inch)	
	Label size	With liner Width: 30 - 80 mm (1.1 - 3.1 inch) Length: 23 - 105 mm (0.9 - 4.1 inch) Linerless Width: 44, 60, 80 mm (1, 2, 3 inch) Length: 30 - 500 mm (1.1 - 19.6 inch)	
	Label roll size	ϕ125 mm(4.9 inch)	
	Inner core diameter	ϕ40 mm (1.5 inch)	
	Label storage capacity	With liner 1820 labels/roll *4 Linerless 2700 labels/roll *4	
Controller unit	Display	Backlit 12.1" XGA (800 × 600) TFT Color LCD	
	Tactile keys	19 keys	
Interphase		USB: 4ch 10/100 base-TX: 1ch	
Memory capacity		1GB	
Power supply *5		Single phase, 200 - 240V, 50/60 Hz	
Power comsunption (MAX)		Operation: 1200W or less Standby: 1000W or less Sleep mode: 200W or less	
Operational environment	Temperature	5 - 35ºC *6	
	Humidity	20 - 85%RH (without condensation)	
Machine weight		With liner Approx.126.8 kg Linerless Approx. 128.1 kg	With liner Approx. 128.5 kg (283.7 lb) Linerless Approx. 129.8 kg (286.0 lb)
Noise label		73 dB or less	
Option		Tenkey cover, Anti-static wire, Wireless LAN unit, Film roll protection cover unit, -10 mm infeed pusher	

* Inch values are those in millimeters (mm) rounded down to the first decimal place.

*1 Depends on the conditions.

*2 For the LL type, the 25SH-380×210×30 mm (14×8×1.1inch) can be packaged. However, there are certain conditions that need to meet.

*3 Depending on product and tray size and labelling requirements.

*4 With liner: at 37 mm (1.4 inch) height and 2.5 mm (0.09 inch) gap. Linerless: 37 mm height.

*5 Power consumption varies depending on site conditions and machine setup.

*6 Printable environment depends on label's specifications. Storage environment for dedicated labels: 5 to 30°C (for linerless labels only)

© Rice Lake Weighing Systems Content subject to change without notice.

230 W. Coleman St. • Rice Lake, WI 54868 • USA USA: 800-472-6703 • International: +1-715-234-9171